V1

User's Manual

Version 4.16v

(11/2002)

For use with:

V1 Disk Recorder Series

w/ Silver Front Panel and firmware up to 4.16

Doremi Labs, Inc.
306 E. Alameda Avenue, Burbank, CA 91502
USA

TABLE OF CONTENTS

WARRANTY **4**

WARNING **5**

AVIS **5**

PROTECTING YOURSELF AND THE V1 ..... **5**

CE NOTICE **7**

INTRODUCTION **8**

DESIGN OF MANUAL **10**

1 SETUP GUIDE 11
1.1 Quick Start Guide for V1 DCT and MPEG2 machines *11*
1.2 Instructions for Initial Setup and Transport *12*
1.3 Setup of one or more drives on V1 DCT and MPEG2 ..... *12*
1.4 Setup of drives on the V1-U and V1-UHD *13*
1.5 Single File System (SFS) Versus Multi-File System (MFS) *13*
2 FRONT PANEL DESCRIPTION 14
2.1 Keypad Area *14*
2.2 Menu Controls and Jog/Shuttle *15*
2.3 Transport Controls *17*
2.4 LCD Time Code Display *17*
2.5 SCSI Drives *18*
2.6 LCD Video Display *19*
3 REAR PANEL DESCRIPTION 20
3.1 Video Inputs / Outputs >>DCT, MPEG2 & Uncomp SD *22*
3.2 Video Inputs / Outputs >>Uncomp. HDTV *23*
3.3 Audio Inputs / Outputs *24*
3.4 9 Pin Connectors *24*
3.5 Ethernet Connector *24*
3.6 Time Code *24*
3.7 SCSI *25*
3.8 115V / 230V *25*
4 MENU & OPTION SELECTIONS 26
4.1 Standard Menu *26*
4.2 Option Menu *30*
4.3 Controller Menu *38*
5 RECORDING & PLAYBACK 40
5.1 RECORDING *40*
5.1.1 Standard (Crash) Recording Procedures 40
5.1.2 Overdubbing Video & Audio Tracks using V1 Remote or VTPpro 40
5.1.3 Overdubbing/Insert of Video or Audio Only 40
5.1.4 Time Code Offset 41
5.2 SPECIAL PLAYBACK FUNCTIONS *41*
5.2.1 OPTION PLAY Command or Chase Command 41
5.2.2 CHASE to LTC Time Code mode 41
5.2.3 CHASE to RS422 or Serial Time Code mode 41
5.2.4 CHASE to BI-PHASE mode 41
5.2.5 Segment (Clip) Definition and Playback 42
5.2.6 Play List & Looping 42
5.2.7 Remaining Time of a Segment During Playback 43

5.2.8 Reverse Play 43
5.3 USING DISCONTINUOUS TIME CODE ON A DRIVE. 43
5.3.1 Increasing Time Code 43
5.3.2 Non-Increasing Time Code 43
5.3.3 Repeating Time Code 44
6 CONTROLLING THE V1 FROM A PC OR MAC 45
7 UPGRADING THE V1 FIRMWARE 46
8 UPGRADING THE RCV2 FIRMWARE 47
8.1 Checking your RCV2 firmware version 47
8.2 The VUploader utility 47
9 WIRING DIAGRAMS AND PINOUTS 48
9.1 Wiring of the V1 RS422-PC Cable 48
9.2 Wiring of the V1 RS422-Mac Cable 49
9.3 Wiring of the standard RS422 Cable 50
9.4 Wiring of the RS422 Chase cable 51
9.5 GPIO Connector Pinout 52
9.6 MIDI and Biphase Connector Pinout: 52
10 DISK RECORD TIME / COMPRESSION CHARTS 53
10.1 DCT Compression Chart 53
10.2 MPEG2 Compression Chart 55
10.3 Standard Definition Uncompressed Chart 55
10.4 High Definition Uncompressed Chart 56
11 USING THE RCV2-9P REMOTE CONTROL 57
12 APPLICATION AND TROUBLESHOOTING INFORMATION 58
12.1 Unable to control V1 remotely 58
12.2 Quick toggle between SHUTTLE & JOG modes 58
12.3 Recording in case of tape drop-out 58
12.4 V1 identification for DAW on the RS422 port 58
12.5 The unit is not playing smoothly in reverse play 58
12.6 The Video has no colors 59
12.7 No Audio from input monitor 59
12.8 Unable to write to active drive 59
12.9 Forcing power ON in any condition 59
13 CONNECTING V1 TO AUDIO WORKSTATIONS & EDIT CONTROLLERS 60
13.1 Connection to the DAWN workstation (v 4.3c or later) 60
13.2 Connection to the Akai DD-1500 with RS422 control (recommended) 60
13.3 Connection to the Akai DD-1500 in CHASE RS422 Mode 60
13.4 Connection to the Fairlight 61
13.5 Connection to the Microlynx, the Lynx 1 and Lynx 2 synchronizers 61
13.6 Connection to the Sonic Solutions 61
13.7 Connection to the Pro-Tools 4.0 61
13.8 Connection to the Orban AUDICY VX 62
13.9 Connection to the Dyaxis II 62
13.10 Most Common Connection 62
13.11 List of DAWs & Editors currently supported by the V1(*) 63
13.12 Using the V1 with Edit Controllers 63
14 INSTALLING SCSI DRIVES 65
14.1 V1 and removable SCSI drives 65
14.2 Important Note about using Jaz Drives 65
14.3 Mounting Data-Express on all DCT products except V1x2 66
14.4 Mounting Data-Express on the V1x2 without drive sharing 67
14.5 Mounting Data-Express on the V1x2 sharing a drive 67
14.6 Mounting Data-Express on the V1-U 67
14.7 Mounting Data-Express on the V1-MP2 67
15 ADDENDUM 68

Warranty

Doremi's warranty obligations are limited to the terms set forth below:

Doremi Labs, Inc. ("Doremi") warrants this hardware product against defects in materials and workmanship for a period of ONE (1) YEAR from the date of original retail purchase.

If you discover a defect, Doremi will, at its option, repair, replace, or refund the purchase price of this product at no charge to you, provided you return it during the warranty period, with transportation charges prepaid, to the authorized Doremi distributor from whom you purchased it or to any other authorized Doremi distributor within the country of original retail purchase. (You can obtain additional information by contacting Doremi at the address printed on this certificate). To each product returned for warranty service, please attach your name, address, telephone number, and a copy of the bill of sale bearing the appropriate Doremi serial numbers as proof of date of the original retail purchase.

If your product fails during the warranty period while you are out of the country of original retail purchase, you may have it repaired (no refunds or replacements are provided) at your expense by an authorized Doremi distributor in the country in which the product failed. You may obtain a refund for the repair costs by submitting a claim to Doremi (instructions are obtained by contacting Doremi at the address printed on this certificate).
This warranty applies only to hardware products manufactured by or for Doremi that can be identified by the "Doremi" and “V1” trademark, trade name, or logo affixed on them. Doremi software is warranted pursuant to a separate written statement packed with the software. Doremi does not warrant any products that are not Doremi products. This warranty does not apply if the product has been damaged by accident, abuse, misuse, or misapplication; if the product has been modified without the written permission of Doremi; or if any Doremi serial number has been removed or defaced.

THE WARRANTY AND REMEDIES SET FORTH ABOVE ARE EXCLUSIVE AND IN LIEU OF ALL OTHERS, WHETHER ORAL OR WRITTEN, EXPRESS OR IMPLIED. DOREMI SPECIFICALLY DISCLAIMS ANY AND ALL IMPLIED WARRANTIES, INCLUDING, WITHOUT LIMITATION, WARRANTIES OF MERCHANTABILITY AND FITNESS FOR A PARTICULAR PURPOSE. No Doremi distributor, agent, or employee is authorized to make any modification, extension, or addition to this warranty.

DOREMI IS NOT RESPONSIBLE FOR SPECIAL, INCIDENTAL, OR CONSEQUENTIAL DAMAGES RESULTING FROM ANY BREACH OF WARRANTY, OR UNDER ANY OTHER LEGAL THEORY, INCLUDING BUT NOT LIMITED TO LOST PROFITS, DOWNTIME, GOODWILL, DAMAGE TO OR REPLACEMENT OF EQUIPMENT AND PROPERTY, AND ANY COSTS OF RECOVERING, REPROGRAMMING, OR REPRODUCING ANY PROGRAM OR DATA STORED IN OR USED WITH DOREMI PRODUCTS.

WARNING

THIS APPARATUS MUST BE EARTHED

IMPORTANT

WARNING

Power requirements for electrical equipment vary from area to area. Please ensure that your V1 meets the power requirements in your area. If in doubt, consult a qualified electrician or Doremi Labs, Inc. dealer.

120VAC	@60Hz for USA and CANADA rating 1A
220-230/240VAC	@50Hz for Europe rating 0.5A
240VAC	@50Hz for Australia rating 0.5A

AVIS

Le voltage peut differer d'un pays a l'autre. Il faut que le V1 soit ajuste au voltage du pays.

LA SOURCE DE PUISSANCE DOIT AVOIR UN CONDUCTEUR CONNECTE A LA TERRE.

Toutes reparations doient etre effectuees par une personne qualifiee.

AFIN D'EVITER UN CHOC ELECTRIQUE, VEUILLEZ NE PAS ENLEVER LE CAPOT.

PROTECTING YOURSELF AND THE V1

Never touch the AC plug with wet hands
Always disconnect the V1 from the power supply by pulling on the plug, not the cord.
Allow only a Doremi Labs, Inc. dealer or qualified professional engineer to repair or reassemble the V1. Apart from voiding the warranty, unauthorized engineers might touch live internal parts and receive a serious electric shock
Do not put, or allow anyone to put any object, especially metal objects into the V1
Use only an AC power supply. Never use a DC power supply.
If water or any other liquid is spilled into or onto the V1, disconnect the power, and call your dealer.
Make sure the unit is well ventilated, and away from direct sunlight.
To avoid damage to internal circuitry, as well as the external finish, keep the V1 away from sources of direct heat (stoves, radiators, etc.).
Avoid using aerosol insecticides, etc. near the V1. They may damage the surface, and may ignite.
Do not use denatured alcohol, thinner or similar chemicals to clean the V1. They will damage the finish.
Modification of this equipment is dangerous, and can result in the functions of the V1 being impaired. Never attempt to modify the equipment in any way.
In order to ensure optimum performance of your V1, select the setup location carefully, and make sure the equipment is used properly. Avoid setting up the V1 in the following locations:
1. In a humid or dusty environment
2. In a room with poor ventilation
3. On a surface which is not horizontal
4. Inside a vehicle such as a car, where it will be subject to vibration
5. In an extremely hot or cold environment

WARNING!!

To prevent fire or shock hazard, do not expose this appliance to rain or moisture

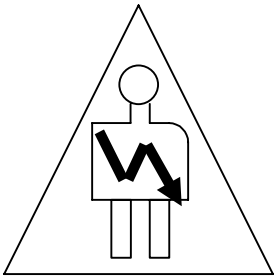

CAUTION

RISK OF ELECTRIC SHOCK
DO NOT OPEN

CAUTION: TO REDUCE THE RISK OF ELECTRIC SHOCK,
DO NOT REMOVE COVER (OR BACK).
NO USER-SERVICEABLE PARTS INSIDE.
REFER SERVICING TO QUALIFIED SERVICE PERSONNEL.

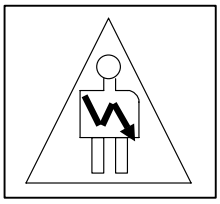

The lightning flash with the arrowhead symbol superimposed across a graphical representation of a person, within an equilateral triangle, is intended to alert the user to the presence of uninsulated “dangerous voltage” within the product’s enclosure; that may be of sufficient magnitude to constitute a risk of electric shock.

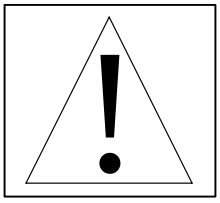

The exclamation point within an equilateral triangle is intended to alert the user to the presence of important operating and maintenance (servicing) instructions in the literature accompanying the appliance.

CE NOTICE

Marking by the symbol CE indicates compliance of the device to the EMC (Electromagnetic Compatibility) directive and to the Low Voltage directive of the European Community. Such marking is indicative that this device meets or exceeds the following technical standard:

- EN 55022 "Limits and Methods of Measurement of Radio Interface Characteristics of Information Technology Equipment."

A "Declaration of Conformity" in accordance with the above standard has been made and is on file at Doremi Labs, Europe, Valbonne, France.

INTRODUCTION

Thank you for your V1 purchase. The V1 is a random access digital video disk recorder that uses magnetic drives (hard drives) as a recording medium.

To record video on a hard drive it should be digitized which means that the analog video information must be converted to a digital data stream. Every NTSC video frame contains 525 lines that have 858 pixels each, however, only 480 lines with 720 pixels each are used to hold picture information.

The table below indicates the bit rate standard definition (SD) and high definition (HD) video without the use of compression.

	Resolution	8 bit encoding	8 bit encoding	10 bit encoding	10 bit encoding
		Mbits/sec	MBytes/sec	Mbits/sec	MBytes/sec
SD	720x480 (NTSC)	166	20.7	207	25.89
SD	720x576 (PAL)	166	20.7	207	25.89
HD	1920x1080x60Hz	995	124.4	1244	155.5
HD	1920x1080x59.94Hz	994	124.3	1243	155.4
HD	1920x1080x50Hz	829	103.7	1037	129.6
HD	1920x1080x30P	995	124.4	1244	155.5
HD	1920x1080x25P	829	103.7	1037	129.6
HD	1920x1080x24P	796	99.5	995	124.4
HD	1280x720x60P	934	116.7	1167	145.9
HD	1280x720x50P*	778	97.3	973	121.6

*Not implemented.

The V1 line of products includes uncompressed video recorders (8 and 10 bit encoding) and compressed video recorders (8 bit encoding), the trade off is between storage requirement and video quality.

V1 Uncompressed
The V1-U series records the video directly on the hard drive without the use of compression. (V1-U & V1-Ux2 for standard definition video and the V1-UHD for HDTV video).

V1 Compressed (DCT vs MPEG2)
Doremi's V1 product line includes models that use DCT compression (the V1, V1m, V1d, and V1x2) and MPEG2 compression (V1-MP2).

DCT (Discrete Cosine Transform) consists of compressing every field of video and saving the data on the drive. MPEG2 is a more advanced compression technique that yields a better transfer rate than DCT for the same video quality. MPEG2 will yield better quality when recording on DVD-RAM drives and larger servers can be built with MPEG2 units.

The CBS algorithm
The V1 uses a constant block size (CBS) algorithm. With traditional compression algorithms, depending on video complexity, the size of each compression field can vary thus requiring maintaining a list to indicate the start of each field on the drive. With CBS all fields have the same maximum size. Consequently, CBS does not require maintaining a list indicating the start of each field because they are all the same size. This results in a more reliable disk recorder with faster video access and frame accurate recording.

Audio and Time Code

In addition to the video, and regardless of the compression ratio used, the V1 records 0, 2, 4, 6 or 8 tracks of uncompressed audio (sampled at 48Khz). Each audio sample is coded on 2 bytes (2*2*48000= 192 KB/s) and every field of time code is sampled on 80 bytes (29.97*2*80= 4.795 KB/s for 2 channels in NTSC and 25*2*6= 4 KB/s for 2 channels in PAL). The V1 can also record up to 8 channels of AES/EBU digital audio, up to 6 channels of analog audio, and 8 channels of embedded audio on SDI.

Hopefully this introduction has explained to the reader the basic technical principles of digital video disk recording.

DESIGN OF MANUAL

This user's manual covers the V1 MPEG2, DCT and Uncompressed series. Although the basic operation of all V1 products is the same, there are minor differences. When a feature refers to only one product series that function will be highlighted in bold with the name of the product as seen in the example below:

>>**DCT ONLY** – for the DCT product series, V1, V1m, V1d, V1x2
>>MPEG2 ONLY – for the MP2 product series. V1-MP2
>>UncompSD ONLY – for the Uncompressed standard definition video product series. V1-U
>>UncompHDTV ONLY – for the HDTV Uncompressed product series. V1-UHD

Bold text is used when referring to buttons on the front panel of the machine or when referring to the display of the LCD screen.

Clip & Segment: Note that throughout the manual the terms clip and segment are used interchangeably.

This manual was written with the latest product firmware numbers below.

DCT (V1, V1m, V1d, V1x2)	**4.16v**
MPEG2 (V1-MP2):	**4.16v**
Uncompressed (V1-U):	**4.16v**
HDTV Uncompressed (V1-UHD):	**4.16v**

Front Panel (RCV2) firmware **1.12**

The V1 firmware can be checked by going to the Option Menu (hold the option button then press the menu button). Scroll to *Version No* by pressing the down arrow key when you reach Option Menu 00.

Check the front panel firmware in the Controller Menu. Hold the **ESCAPE** button and press **MENU.** And then scroll to *Firmware.*

If you have a newer 4.16 firmware than shown above, check the addendum pages on the back of this manual for a list of changes and additions. If you have recently upgraded your firmware please print out the README document included in the zip file with the new firmware. You can also download the latest V1 manual from our tech support page "manual" section on the Doremi website

If you have an older firmware than shown above, then please upgrade your V1 to the latest firmware by downloading the new firmware from our tech support page's "firmware" section on the Doremi website. If you will not be upgrading then please download the manual with the same firmware version as your V1 from the Doremi ftp page.

1 Setup Guide

1.1 Quick Start Guide for V1 DCT and MPEG2 machines

For more information about the items in bold, refer to Chapter 4 there you will find every Menu and Option Menu command listed and explained. *Note V1-U and V1-UHD drives are pre-installed at the factory. See section 1.4 for setup information.*

This quick start guide assumes the most common hardware setup: Single video channel V1 equipped with a removable hard drive using the Kingston Data Express drive carrier and receiver. If you purchased your Kingston and SCSI drive from Doremi, your V1 has been setup at the factory.

1. Plug the hard drive carrier in the Data Express receiver and turn the key counter clockwise until it locks
2. Power the unit ON by pressing the Power On Switch. If you keep watching the LCD display on the RCV2 or VToolsPro, you will see a “Scanning” message displayed for about 30 to 60 seconds (the

2.3 Transport Controls

The V1 standard transport controls are:

REC	Record control button. This key is used in several ways described later in this menu.
STOP	Stop control button. The STOP key will cause the V1 to stop any transport control (Play, record, rewind, fast forward).
PLAY	Play control button. If the active drive has recorded material, pressing the PLAY key will start playback from the current location at normal speed and the green LED will go ON.
REW	Rewind control button with a speed of 40 times normal. When the rewind is close to the beginning of the recording, the speed is slowed down to normal until it reaches the start. Pressing this key again will increase the speed. There are three levels REW+REW+REW.
FF	Fast forward control button with a speed of 40 times normal. When the fast forward is close to the end of the recording, the speed is slowed down to normal until it reaches the end. Pressing this key again will increase the speed. There are three levels FF+FF+FF.

2.4 LCD Time Code Display

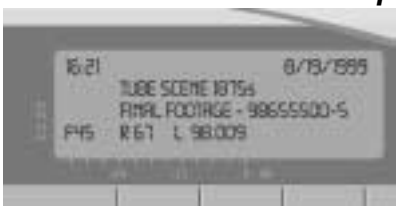

The first line of the Time Code display shows the time location of the video material using the following format: "**HH:MM:SS:FF F1/F2"** where "HH" represent the hours from 00 to 23, "MM" represent the minutes from 00 to 59, "SS" represents the seconds from 00 to 59, "FF" represents the frames from 00 to 24 in PAL and 00 to 29 in NTSC, "F1/F2" represent the field: "F1" for odd fields and "F2" for even fields. This display will show either **Absolute Time** or **Time Code** depending upon what the user has selected in the "Time Mode" (01) Menu. The display also shows Drop/NonDrop information; "." Means NonDrop and ";"means DROP frame. Field one shows "." Field two shows ":" or ";"

The second line displays the following:

- At the V1 start-up, the bottom left displays the version of the front panel (RCV2) software installed on the flash EPROM (example, V .71 when version .71 is installed), then **No Disk** and **Scanning** messages will alternate on the left side and **Stop** is displayed on the right side until a valid drive is recognized on the SCSI bus of the V1, in such case **No Disk** will disappear and only **Stop** will be displayed indicating that the V1 is now ready to access the drive. If **No Disk/Scanning** is still displayed even though a disk was installed, the V1 did not recognize the disk. Check for SCSI ID conflict or check the MD settings in **Option Menu** 30.

- During transport controls, the current operation is shown on the right side of the display: **PLAY, STOP, REWIND, FORWARD, RECORD, JOG, SHUTTLE, VAR..**
  ("VAR" is indicated during play in chase on LTC/MTC or in variable speed from RS422)

- During shuttle movement, the shuttle speed is shown as :
  If forward shuttle : **">> xx %"** with xx % = 10%, 20%, 48%, 100%, 200%, 500%, 1000%
  If reverse shuttle : **"<< xx %"** with xx % = 10%, 20%, 48%, 100%, 200%, 500%, 1000%

- During segment playback, the remaining time up to the OUT point is shown as **"ssss : MM.SS",** where "sss" is the number of the segment played from 001 to 2047, "MM.SS" is the remaining time up to the OUT point of the segment played in mn:sec

- During formatting, the message **Formatting**... is shown. During initialize, the message **Initialize** is shown. During drive copy, the message **Copying**... is shown, once done, **Copy Complete** is shown and if source drive has invalid recording, **Bad Segment** or **Copy aborted** is shown.

- During Stripe the message says initialize.

During the drives mounting (insert) and un-mounting (eject), the message **No disk** is displayed.

2.5 SCSI Drives

The V1 is shipped with a choice of standard SCSI storage devices: 3 1/2" half-height or low-profile (LP) hard drives mounted internally inside the V1 or in a removable tray (Data-Express).

When mounted in a removable tray, hard drives can be removed (or installed) while the V1 is on-line (without the need to shut the unit off). To remove (or install) a drive, insert the supplied drive key into the key slot on the receiver below the lit SCSI ID number and turn it clockwise (or counter-clockwise). When removing a drive, turning the key clockwise will unlock the drive and cut power off from it causing it to spin down. **Before removing a drive, wait until it has completely finished spinning down.** This will usually take about 30 to 40 seconds depending on the drive. The Data Express receiver inside the V1 sets the SCSI ID. All V1 internal drives should not be terminated. The external SCSI termination supplied with the V1 should be mounted before powering up. *If there is no SCSI connector on the back then the terminator has bean mounted internally.*

Additional SCSI drives can be added to the V1 rear panel SCSI connector. All drives on the external chain should not be terminated except for the last drive in the chain, which should be terminated. When no drives are connected externally, connect the supplied SCSI terminator to the SCSI connector on the back of the V1.

DO NOT USE THE SCSI ID ASSIGNED FOR THE V1 IN OPTION MENU 17 FOR ANY OF THE DRIVES CONNECTED TO THE V1.

2.6 LCD Video Display

Optional LCD video confidence monitor. The display can be turned OFF or ON. See section 4.3 “video” option.

3 Rear Panel Description

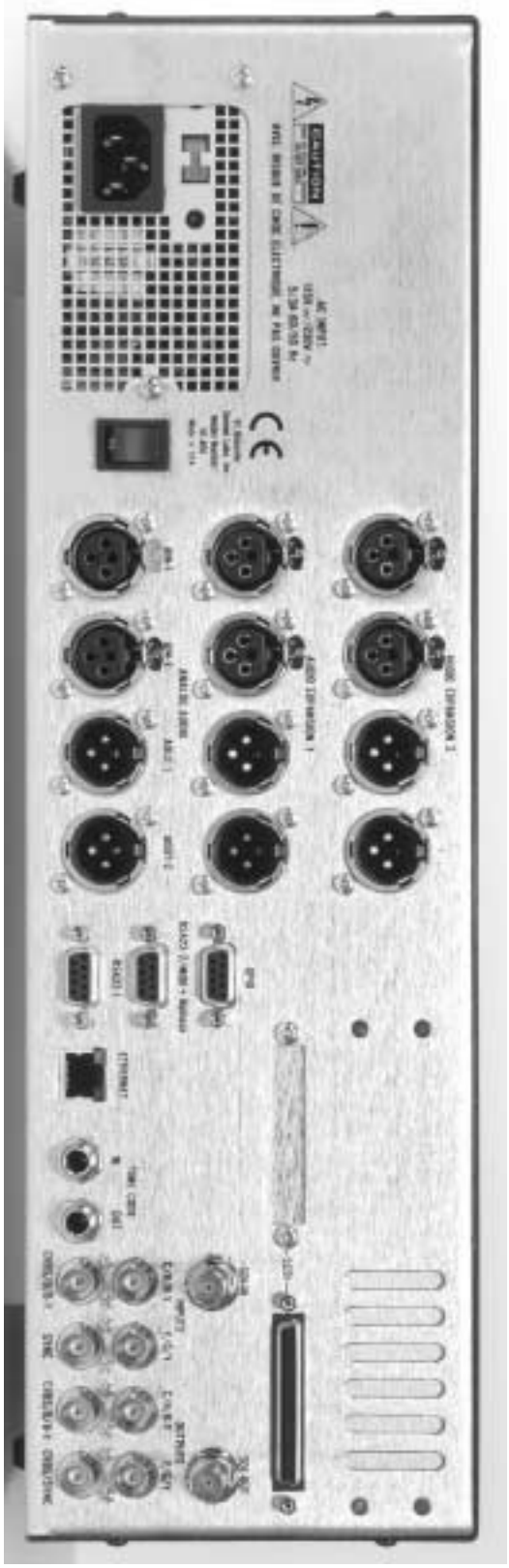

DCT, MPEG2 and Uncompressed SD

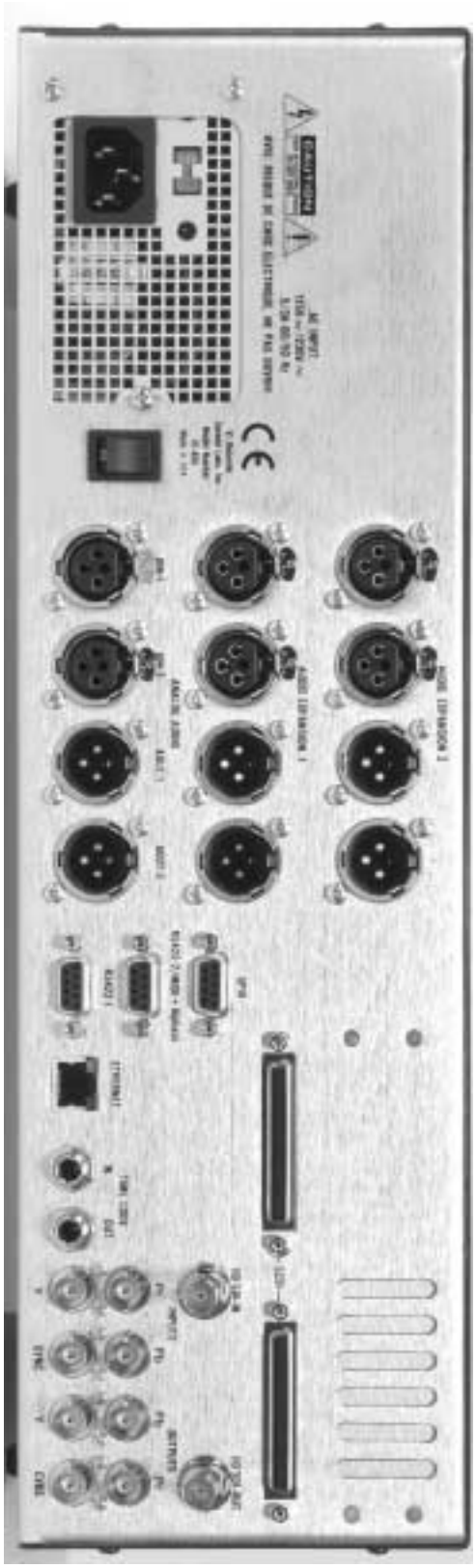

Uncompressed High Definition (HD)

3.1 Video Inputs / Outputs >>DCT, MPEG2 & Uncomp SD

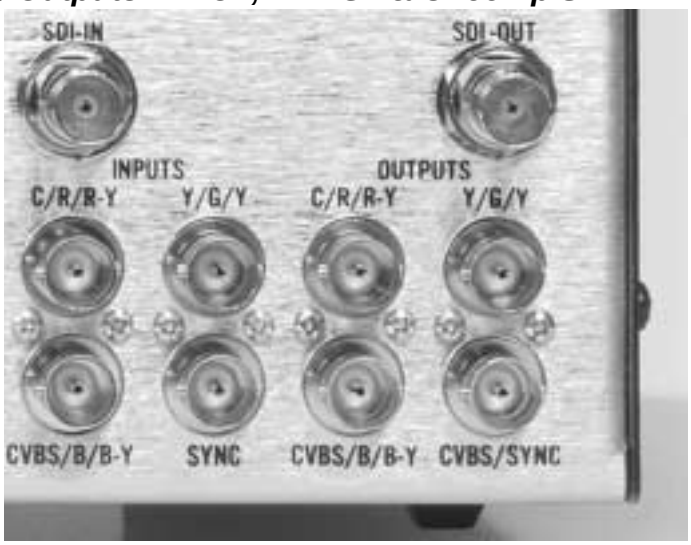

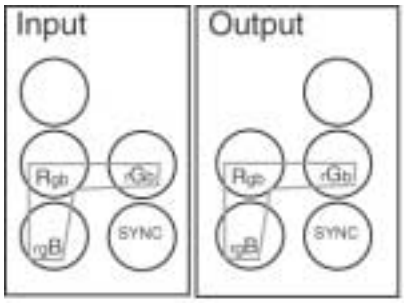

RGB: Red, Green & Blue
**Output must inlude sync

SYNC Input: Sync for Genlock

SYNC Output: Internal Sync Ouput

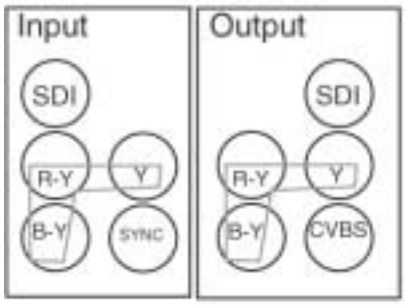

R-Y, Y, B-Y: Component YUV Video

SDI: Serial Digital Interface. Digital Component Video (available with embedded audio option)

SYNC Input: Sync for Genlock

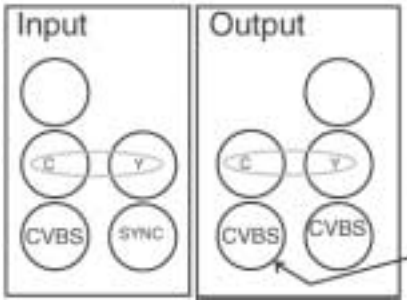

CVBS: Composite Video

Y & C: S-VHS video

SYNC Input: Sync for Genlock

Note: Only available when video out selection is set to YC

Note :	Please **do not use YUV/RGB output and Y/C (S-Video) outputs at the same time** because these signals are coming from the same buffered outputs and so this will produce a mismatch on impedance loads.
Sync In	House Sync input BNC connector for the V1 synchronization reference. Use only Black Burst Sync here. Your Sync input should **not exceed 1V P-P**.
Video	Analog Composite video input and output BNC connectors. Video IN is where you connect your video signal for recording to the V1 and Video OUT is for connection to a video monitor or another video recorder.
S-Video	Two separate Y and C BNCs. You must use a Y/C to Mini DIN-4 adaptor for single cable S-VHS applications.
SDI	Optional. Serial Digital Interface input and output BNC connectors for a direct connection with digital betacams.
RGB/YUV	Optional. Three RGB or YUV selectable BNC output connectors

3.2 Video Inputs / Outputs >>Uncomp. HDTV

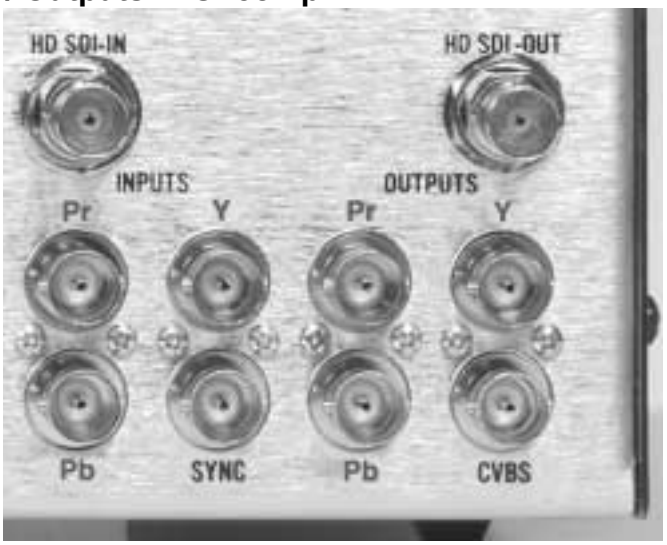

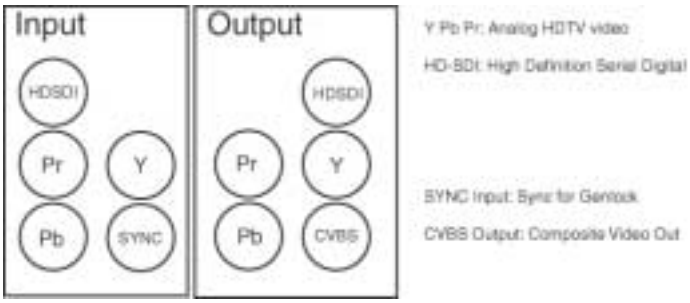

HDSDI	Serial HDTV Video
Y Pb Pr	Analog HDTV Video
SYNC Input	Tri-level sync input. Locks the V1 to an external sync source
CVBS	Composite Reference Output

3.3 Audio Inputs / Outputs

Analog Audio: 2channel analog XLR inputs and outputs. These XLR connectors are the balanced analog audio inputs and outputs. Pin 2 is hot (+), pin 3 is cold (-), and pin 1 is ground.

Digital Audio: 4 channel digital XLR inputs and outputs. Transformer balanced AES/EBU input and output. Pin 2 is hot (+), pin 3 is cold (-), and pin 1 is ground.

Audio Expansion1: Expansion Card Slot holds one of the following
A- 4 Channels AES / EBU
B- 2 Channels analog audio

Audio Expansion2: Expansion Card Slot holds one of the following
A- 4 Channels AES / EBU
B- 2 Channels analog audio

3.4 9 Pin Connectors

GPIO: General Purpose inputs and outputs

RS-422-1: Primary serial interface connector to the V1. Connector 1 should be connected to your edit controller or workstation, while connector 2 is used to connect the optional **RCV2** external remote control from Doremi Labs, Inc.

RS-422-2/ Midi + Biphase: If all 9 jumpers on J34 are set to the RS422 position, this connector will be used as a second RS422 port (this is the default setting when the unit is shipped). If all 9 jumpers on J34 are set to MIDI+BP position, this connector will be used as a MIDI I/O and Biphase input with a +5V supply.

3.5 Ethernet Connector

Ethernet: RJ45 connector 100BaseT

3.6 Time Code

Balanced TRS 1/4" input and output connectors for LTC time code. The V1 time code input accepts balanced signals (tip hot, ring cold & sleeve is ground). If you are feeding an unbalanced signal to it, **both** ring and sleeve **should** be connected to GND. You **can** use an **unbalanced** jack (tip and sleeve) on the **time code input** of the V1. The V1 time code output is a balanced signal (tip hot, ring cold & sleeve is ground). If you are feeding it to an unbalanced input, **ring should not be connected to anything**. You **cannot** use an **unbalanced** jack (tip and sleeve) on the **time code output** of the V1. If you connect time code from one V1 to another the cable should be balanced on both ends.

3.7 SCSI

Standard 68-pin female connector for connection to external SCSI drives. When no external SCSI devices are used, make sure the supplied terminator is connected here. When connecting external drives, the last drive in the chain should be terminated. All V1 internal drives supplied by Doremi Labs, Inc. are non-terminated.

This connector may not appear on your unit because the terminator was placed inside the unit.

3.8 115V / 230V

Confirm that the proper voltage is selected for your area on the power supply. The switch is located next to the power connector.

4 Menu & Option Selections

From the front panel, you have access to three different sets of menus. Pressing the **MENU** key will provide access to the "**Standard Menu"** and pressing **OPTION MENU** (hold the OPTION key while pressing MENU) will allow access to the "**Options Menu**". Pressing the ESC and MENU key will provide access to the "**Controller Menu**". If you don't have a front panel controller, you can either use the VToolsPro utility or the RCV2 stand-alone controller.

4.1 Standard Menu

The **MENU** key will call up the menus allowing the user to define the set-up of the V1 unit. The up arrow key ⇧ (or down arrow key ⇩) will allow the user to get to the next (or previous) menu selection. The **TOGGLE** button generally sets the parameters for the selected menu. Press **TOGGLE** to increase the parameter and hold **OPTION** and **TOGGLE** to decrease the parameter.

Once menus are set-up, pressing the **ESC** key will save the settings and quit the menu mode. All the settings related to the recording i.e. Remote/Local, Time Mode, Sync Source, Input Source, etc. are automatically **saved** on the current disk when you exit the menu mode

Menus (00), (01), (02), (04), (05), (06) and (10) are saved on the active drive. So if this drive is mounted on another V1 unit, all these settings will be recovered.

(00) Control Selects the mode of control for the V1. The **TOGGLE** key will switch between:

Local	For front panel control of the V1
Remote	For control of the V1 by an external edit controller or workstation via the rear panel RS-422 connectors

(01) Time Mode Selects the Time Code source of the V1 during playback. Regardless of the setting for this option, the V1 will record the time code present on the video input on the VITC track, and the time code present on the LTC input on the time code track. This menu option will allow you to choose the time code during playback. The **TOGGLE** key will switch between:

A Time	Absolute Time, the time code displayed on the V1 front panel and present on the **TIME CODE OUT** connector during playback or record is generated internally by the V1. A Time represents the time elapsed since the start of the recording unless a time code offset has been set. *See Section* 5.1.4, *"Time Code Offset"*.
Time Code	During record the time code present on the **TIME CODE IN** connector will be recorded on the time code track (guide track) of the V1 active drive, a valid LTC signal should first be fed to the V1 LTC IN connector. The time code displayed on the V1 front panel and present on the **TIME CODE OUT** connector during playback or record is the same time code recorded on the time code track, unless a time code offset has been set. *See Section* 5.1.4 *"Time Code Offset"*.
A Time as LTC	If you are using A Time (with or without an offset) as your time code and if your controller requires time code, you should choose this option, which will make the A Time look like Time Code on the RS422 connection.

VITC Time	During record, the time code embedded in the video input signal (VITC) will be recorded on the VITC track of the V1 active drive. The time code displayed on the V1 front panel and present on the **VITC OUT** connector during playback or record is the same time code recorded on the VITC track, unless a time code offset has been set. *See Section 5.1.4, "Time Code Offset".*

(02) Sync from Specifies the sync reference during playback. The V1 is always locked to the **Input** when recording. The **TOGGLE** key will switch between:

Auto	The V1 syncs to the **SYNC IN** input.
Sync In	The V1 syncs to the **SYNC IN** input. **Auto** and **Sync In** are the same.
Input	The V1 syncs to the **VIDEO IN** input.
Input+VCO	**UncompHDTV ONLY** Sync to input using a VCXO for a low jitter playback.
Internal	The V1 syncs to its own internal clock.

(03) Chase Specifies how the V1 will **chase** to time code. The **TOGGLE** key will switch between:

Off	**Normal mode of operation** when the unit is controlled by a workstation via the 9 pin connection.
LTC	In this mode the V1 will chase the time code fed through the **TIME CODE INPUT** jack. This mode is recommended when no RS422 9 pin control is present *(See Sections 5.2.1 and 5.2.2, Chase Play.)*
MTC	In this mode the V1 will chase the time code fed through the **MIDI IN** connector. This mode is recommended when no RS422 9 pin control is present. *This feature may no longer be supported by Doremi Labs.*
Serial TC (RS422)	In this mode the V1 will chase the time code received on the RS422 connection. This mode requires a special cable and it is recommended only if no RS422 9 pin control is present. *Please refer to Paragraph 9.4, "Wiring of the RS422 Chase Cable"* for more information on how to build the cable.
Biphase	In this mode the V1 will chase the Biphase input clock signal. Option Menu (18) "Clks/Frame" should be setup properly in order to select the clock frequency. *Please refer to option menu (18) at the end of Section 1.2*. To use the Biphase mode, the internal cable of the second RS422 port should be connected to J3 on the main motherboard. *Please refer to Section 5.2.4 for information*.

Note**:** **The Chase to LTC Mode** above is different than the **OPTION PLAY Command** also referred to as Chase Command (note the difference between **Mode** and **Command,** *See Sections 5.2.1 and 5.2.2 for an explanation of the difference).*

(04) Mount If you have more than one drive powered up, this command will mount the drive with the highest SCSI ID number. Press the **TOGGLE** key. The message “Are you sure?” will appear on the LCD screen,

- If you want to mount, hold the **OPTION** key and press the “--“ key again.
- If you change your mind and don't want to mount, press **ESC**.

(05) Input From Specifies which video input of the V1 is active. The **TOGGLE** key will switch between **COMPOSITE**, **S-VIDEO, YUV, RGB OR SDI**, depending on the model and options you have installed.

(06) Compress (Bit Rate for MPEG2 units, Compression Ratio for DCT units and select between 8 and 10 bit for the V1-U) An initialize command should be executed in order for the new setting to be valid for the new recording. Pressing the **TOGGLE** key on the MPEG2 or DCT units will increase the ratio then it will recycle. Holding down the **OPTION** key while pressing the **TOGGLE** key will decrease the ratio.

(07) Initialize This command wipes (deletes) all previous recordings, and writes all the new set-up parameters selected in the menus on the active drive. A disk that was never initialized on the V1 will display the message "No MD Present" until it gets initialized. Use this command to change the compression ratio. To initialize a disk, press the **TOGGLE** key.

A message will appear on the LCD screen: “Are you sure?”:

- If you want to initialize, hold the **OPTION** key and press the **TOGGLE** key again, the LCD will display "Initialize.." and initialize the disk. Once done, the message "Initialize.." will disappear and the drive is now ready for recording.
- If you change your mind and don't want to initialize, press **ESC**.

CAUTION NOTE !!

OPTION MENU 30 should be set properly before initializing a drive.

(08) Format This command wipes all previous recording and prepares the active drive for optimal V1 performance. Brand new drives do not need formatting. The Format command should always be followed by an **Initialize** command. To format a disk, press the **TOGGLE** key. You will be prompted with the following message: “Are you sure?”:

- If you want to continue, hold the **OPTION** key and press the -- key again, the LCD will display "Formatting..." and will format the disk. Once done, "Formatting..." is cleared and the drive is now ready for the **Initialize** operation.

CAUTION NOTE !!

Formatting a drive is a long procedure, please do not attempt to use the V1 until the format operation is complete and DO NOT SHUT OFF THE V1 DURING THE FORMAT OPERATION

(If the V1 is switched off during the format operation, you will need to restart the format operation).
The format operation is a long procedure that depends on the size and speed of the drive.

- If you change your mind and don't want to format, press **ESC**.

CAUTION NOTE !!

OPTION MENU 30 should be set properly before formatting a drive.

Once Format and Initialize have been executed on a drive, it is not necessary to Format again. Initialize is enough for erasing the drive.

(09) Drop Frame This option is only valid when Time Mode is set to A-Time or A-Time As LTC in NTSC mode *(See Section 5.2, "Special Playback Functions").* The **TOGGLE** key will switch between **Drop** and **Non Drop**.

(10) Time Left This menu selection will display how much time (HH:MM:SS:FF) is still available on the disk from the end of the existing recording. The total duration is calculated using the disk capacity detected, the compression rate, and the number of audio channels. After an **Initialize command**, **Time Left** displays the full capacity of the drive in "HH:MM:SS:FF" format. If you call this menu during recording, it will show the time left at the moment it was activated. When the drive is fully recorded, "Time Left" will display 00:00:00:00 and you are only allowed to record over existing material. When this menu selection is active pressing the ++ key will update the time left.

4.2 Option Menu

Hold the **OPTION** and the **MENU** key to call up the “Option menus”. The up arrow key ⇧ (or down arrow key ⇩) will allow the user to get to the next (or previous) menu selection. If there are submenu selections for the Menu items use the **++** or **–** buttons to scroll through the selections. The **TOGGLE** button generally sets the parameters for the selected menu. Press **TOGGLE** to increase the parameter and hold **OPTION** and **TOGGLE** to decrease the parameter. Once menus are set-up, pressing the **ESC** key will save the settings and quit the menu mode.

OPTION Menus (05) and (06) are saved on the active drive. So if this drive is mounted on another V1 unit, all these settings will be recovered.

V1 Info. If you are in Option Menu (00) and hit the down arrow key, the V1 will display information about the unit. The TOGGLE button will switch between: Version Number, IP address, Ethernet Port Address, the amount of RAM used on that unit and the unit’s serial number.

(00) Auto Play **>>DCT & MPEG2 ONLY** If you enter a segment number that is already defined *(See Section 5.2.5 "Segment Definition & Playback").* The V1 will play that segment every time it mounts that drive. This function can also be used to automatically locate to a start point every time the disk is mounted. All you need to do is set the **IN** and **OUT** time at the same location for the auto-play segment.

(01) Disk Copy **>>DCT & MPEG2 & UncompSD (single file system) ONLY** This feature will allow you to make duplicates of one recording from one disk to another without the need to re-record the video thus allowing video, audio time code, segments definition and menu set-up to be transferred digitally from one drive to the other. First make sure your source disk is the active drive (when you hit play, only the source disk should be playing) then power up (insert cartridge in) your destination drive(s). Engage the Disk Copy menu, the ++ key will switch between each of the following sub-menus:

Source is	Type the SCSI ID number of the source drive (Valid range from 0 to 15), then use "++" to go to the next sub-menu.
# Targets	Type the number of drives that will act as your destination drives (Valid range from 1 to 4), if you enter a value higher than the maximum allowed, the V1 will default to its maximum, then use "++" to go to the next sub-menu.
Target #1	Type the SCSI ID number of the destination drive number 1 *(See Caution below).* If you specify more than one target, you will be prompted for Target #2, etc..., then use "++" to go to the next sub-menu.
Segment #	If you wish to copy only a segment (already defined on the source drive), enter the segment number, from 1 to 2047, and if previous menus 1,2,3 have the values you need, press ENTER to start the copy process. If you need to perform a full copy, then use "++" to go to the next sub-menu.
Full Disk	If you wish to copy the full disk, and if previous menus 1,2,3 have now the values you need, press **ENTER** to start the copy process. If you do not want to perform the copy operation at this time hit **ESC** , use "++" or "--" to go to other sub-menus.

Important notes:

- Hitting **ENTER** after each of these sub-menus will save your choice and launch the copy operation, so do not press **ENTER** until you have entered all the correct values in the sub-menus.

- The destination drive must be previously initialized on a V1. The copy will be aborted if the destination drive is not a V1 drive.

- During the copy process, the LCD will display a counter showing how much is left to be copied (in Gbytes, Mbytes), when finished, it will display "Completed".

- The copy process will only copy valid recordings from the source drive. If the source drive has invalid recordings or bad sectors in the recording to be copied, the LCD will display "Copy aborted" and will abort the copy process. In this case check your recording on the source drive, and record it again if it is damaged or contains bad sectors.

- **Caution! : Your destination drive will be fully erased by the copy.**

(02) Edit Preset

This feature will allow you to select which audio track(s) to edit/overdub while the other non selected track(s) are monitored at the same time. For the V1-U the overdub feature is only supported on the **Seagate Cheetah SCSI** hard drives 15k RPM. For the V1-MP2 & DCT you can use 10k RPM drives. For the V1-UHD it requires at least 4 15000 RPM drives or the dual-SCSI external drive setup. In addition the with the V1-UHD you can do “assemble” or “audio” only.

This feature is used only when you are using the front panel to do the overdub. If you are using an edit controller **the edit controller will set these options automatically.** The settings the edit controller has selected will be reflected here.

The ++ key will switch between the following selections:

A1	To insert/overdub on audio track 1, select **On** by pushing the **TOGGLE** key.
A2	To insert/overdub on audio track 2, select **On** by pushing the **TOGGLE** key.
A3 to A8	If your V1 includes additional Audio in/out tracks (up to 8) they will be listed consecutively here
TC	To insert/overdub time code on the guide track, select **On** by pushing **TOGGLE** key. Note that you can use the "Time Code Offset" function and keep this option **Off**.
Video	To insert/overdub video, select **On** by pushing the **TOGGLE** key.
Assemble	If this submenu is set to **On** by pressing the **TOGGLE** key, all previous submenus 1., 2.,3. & 4 will default to the **On** position and the drive is set for normal recording (video, audio and time code). You can select **Off** by pressing the "**--**" key. The reason for the **On/Off** toggle for video is to allow the V1 to record while in PLAY mode (Usually required by Editors using RS422 control), in this case, the sub-menu Assemble must be **On**.
Insert	Select **On** or **Off** by pressing the **TOGGLE** key. Enables or disables the ability to insert video or audio using the front panel.

The overdub procedure is explained further in Section 5.1.2

(03) Set Video This menu option will allow you to set the video parameters. The ++ key will switch between:

Delay	This parameter sets the delay until the video output goes black (screen saver). Hold the **OPTION** and the **TOGGLE** to move the delay down by 10 seconds, **TOGGLE** will move it up by 10 seconds. "000" will disable this feature, "010" will cause the unit to output black video when the unit is idle for 10 seconds.
Pattern	Video Pattern. Use the TOGGLE button to switch between ON and OFF.
Out	Use the TOGGLE button to select the output as RGB, YUV or S Video
CH PH	Chroma Phase. Use the TOGGLE button to increase or decrease the chroma phase from 0 to 360. You can also enter a number from the keypad followed by the **ENTER** key
HTRIG on/off	HTRIG adjustment. Use the **TOGGLE** key to set the HTRIG adjustment ON or OFF.
HTRIG value	Hold the **OPTION** and **TOGGLE** key to move the picture to the left, **TOGGLE** will move it to the right. You can also enter a number from the keyboard followed by the **ENTER** key.
Black	Sets the black level to 0V for the Japanese standards and 0.75V for the American standards. Used in NTSC only.
PAL Switch	0 or 1. Use the TOGGLE button to set the value according to the PAL standard used in your area (A or B)
Luma Brit	Luma Brightness. Use the TOGGLE button to set. 00 is the default value of the analog input.
Luma Cont	Luma Contrast. Use the TOGGLE button to set. 00 is the default value of the analog input.
Chroma Sat	Chroma Saturation. Use the TOGGLE button to set. 00 is the default value of the analog input.
Chroma Hue	Chroma Hue. Use the TOGGLE button to set. 00 is the default value of the analog input.
Comp Brit	Composite Brightness. Use the TOGGLE button to set. 00 is the default value of the analog input; Component YUV/RGB
Comp Cont	Composite Contrast. Use the TOGGLE button to set. 00 is the default value of the analog input; Component YUV/RGB
Comp Sat	Composite Saturation. Use the TOGGLE button to set. 00 is the default value of the analog input; Component YUV/RGB
VTrig	Use the "++" or "--" to set the VTRIG Adjustment. 00 is the default value. The "--" will move up the picture, "++" will move it down. You can also enter a number from the keyboard followed by the **ENTER** key.

This option is not saved on the drive, it is saved on the V1 flash EPROM only if you execute a **Save** from optional menu (04).

(04) Save This menu option will save all the Flash EPROM settings of the V1. To write the changes on the Flash EPROM (see Note below), press the ++ key.
A message will appear on the LCD screen: “Are you sure?” :

- If you want to save, hold the **OPTION** key and press the “--“ key again, The V1 will write the changes on the Flash EPROM.
- If you change your mind and don't want to save, press **ESC**.

NOTE: THIS FUNCTION SHOULD NOT BE ABUSED BECAUSE THE FLASH EPROM CAN ONLY BE WRITTEN 2000 TIMES. IF YOU SAVE YOUR SETTINGS ON THE FLASH EPROM MORE THAN 2000 TIMES YOU MIGHT DAMAGE IT AND NEED TO REPLACE IT BY SENDING THE UNIT BACK TO DOREMI LABS.

(05) Disk Access This menu option will allow you to write protect your drive. The **TOGGLE** key will switch between **Play Only** and **Play & Record** (Default). When **Play Only** is selected, you will not be able to record on the disk or initialize it. This option is saved on the disk. Setting is saved on the active drive. So if the drive is mounted on another V1 unit, these settings will be recovered.

(06) Frame Mode Select the TOGGLE button to switch between Frame Mode ON, OFF and Play Only. When ON the V1 will stop on a frame and in slow motion it will play frame by frame. When OFF the V1 will stop on a field and in slow motion it will play field by field. In Play Only, the V1 will stop on a field and in slow motion it will play frame by frame. This setting also affects the Step Recording option. For Slow Motion application, the frame mode must be OFF. When the V1 is in stop (freeze) mode and Frame Mode is set to ON a full video frame will be displayed. Setting is saved on the active drive. So if the drive is mounted on another V1 unit, these settings will be recovered.

(07) Step Rec Step Recording. Select the TOGGLE button to switch between Step Recording enabled or disabled. When enabled, every time the V1 goes into record, it will only record one frame (or field depending on the Frame mode setup). This option is useful for animation. When Step Recording is disabled, the V1 is in normal mode of operation. If you want to record video only without altering the previously recorded audio, press the ++ key. This will give you the option of recording “All” or “Video Only”. You can switch between the two modes using the “++” key. **Step record cannot be enabled on the MPEG2 products.**

(08) Clip Menu The **TOGGLE** key will go to the beginning of the next or previous clip (segment). This menu only shows previously defined segments. For more information on defining segments *see Section 5.2.5 "Segment Definition and Playback").* You can also type the clip number using the keypad followed by the **ENTER** key, if you enter an undefined clip number the V1 will locate to the previous clip (segment). When a clip other than 0 is selected here, the V1 operations will be restricted between the boundaries of that clip.

(09) Vid Optns The video options menu features settings for VITC (vertical interval time code), close captioning and the time code burn-in window.

VITC In	Select off or the line number the source VITC is on (10 to 18) (Recommended Values: NTSC:14 - PAL:19)
VITC Out	Select off or the line number to output VITC on (10 to 18) (Recommended Values: NTSC:14 - PAL:19)
CC Out	Close Caption. Set to on or off to allow close caption to pass through the V1. (Analog and SDI Video)
BIW Pos	Time Code Burn-in window. Position on the screen at Top-Left, Top-Center, Top-Right, Bottom-Right, Bottom-Center, Bottom-Left (Analog Video Outputs Only)
BIW Mode	Select off, black on white, or white on black numerals.

This selection is saved on the machine after executing **(04) Save**.

(10) Audio In To ensure lossless audio on the digital input, it must be sampled at 48.000Khz and phase locked to the video input. If you feed digital audio at a different frequency, or if it is not phase locked to the video, the V1 will re-sample the audio at 48Khz which might produce undesirable clicks.
Select the TOGGLE button to switch between analog, AES/EBU or embedded audio on SDI, depending on the options installed.

(11) SCSI Speed Use to set the SCSI Parameters. The different submenus and selections are:
Clock: 10MHz, 20MHz or 40MHz
Width: 8bit or 16 bit
Termination: ON or OFF

For standalone units working with Wide SCSI drives, the settings should be: 40-16-ON.

For units installed with the V1Xserver, the settings should be: 10-16-ON.

For the MPEG2 and DCT units with a loop SCSI cable (2 SCSI connectors in the back), the Termination should be OFF.

(12) V1 Type Select the TOGGLE button to switch between Player Only or Rec/Player. This option is used when more than one V1 unit are connected to the same drive or RAID. You can only have one unit set in Rec/Player and all the rest should be Player. The Rec/Player is the only unit allowed to record on the network.
Important Note: When the unit is in **Player Only** mode, all operations that write to the active drive are denied, including record, initialize, format, etc.

(13) Video Type Select the TOGGLE button to switch between NTSC and PAL. If you want the new setting to be the default startup setting, a **Save** command should be executed after changing this parameter. The unit will switch only after the drive is initialized.

>>**UncompHDTV ONLY** This function allows you to select between the different HD formats of your source below by pressing the TOGGLE button:

1080 50i	Selects 1080 line interlaced 24 frame /sec standard
1080 30p	Selects 1080 line progressive 30 frame /sec standard
1080 25p	Selects 1080 line progressive 25 frame /sec standard
1080 60i	Selects 1080 line interlaced 30 frame /sec standard
720 60p	Selects 720 line progressive 60 frame /sec standard
1080 24p	Selects 1080 line progressive 24 frame / sec standard

(17) SCSI ID Select the TOGGLE button to switch between 0, 1, 2, ..14 and 15. The selection represents the SCSI ID number of the V1 after restart. **Do not use a SCSI ID number for the V1 that conflicts with any installed drive**. A **Save** command should be executed after changing this parameter. The default SCSI ID is 7.

(18) Clks/Frame Select the TOGGLE button to switch between 01, 02, 04, 10. The selection represents the number of clicks on the incoming Biphase signal per video frame (01= 1 click per frame). In PAL 25 frames/sec, 01=25Hz, 02=50Hz, 04=100Hz, 10=250Hz. If you want the new setting to be the default startup setting, a **Save** command should be executed after changing this parameter.

(19) Emulation The "++" or "--" will toggle between V1 (default), BVW-75 and DVW-500. If you want the new setting to be the default startup setting, a **Save** command should be executed after changing this parameter.

(20) # Audio Ch Select the TOGGLE button to switch between 0. 2. 4. and 8 which designate the number of audio channels to be recorded. Changing this menu will take effect only after you initialize the drive.

(21) Jog On Select the TOGGLE button to switch between “1&2”, “3&4”, “5&6” and “7&8”. When the V1 is playing at any speed below 100%, the audio will output from only two channels. Use this option to select which tracks the audio will be on when the V1 is playing at any speed below 100%.

(22) Loop Mode Select the TOGGLE button to switch between OFF and ON. When this option is set ON, the V1 will record (play) in a loop specified by the clip (segment) selected

in option menu (8). If the clip selected in Option Menu 8 is 0, the loop will be on the whole disk space.

(23) Edit Time The "++" key will switch between IN and OUT. When using the EDIT ON/OFF commands from a P2 editor

EDIT IN	2, 3, 4 or 5 frames. Pressing **TOGGLE** specifies the number of frames the V1 will wait before it starts recording after receiving an EDIT ON command. For MPEG2 units this should be set to 5.
EDIT OUT	2, 3, 4 or 5 frames. Pressing **TOGGLE** specifies the number of frames the V1 will wait before it stops recording after receiving an EDIT OFF command. For units this should be set to 5.

(24) Stripe TC This command will stripe Time Code with black video and no audio. The striping will start at the time line position starting with the time line displayed on the LCD. Example: If you want to stripe time code beginning at 01:00:00:00, you would: Initialize your drive. Create a one hour offset using the **OPTION IN** command. Then use this Option Menu command by pressing the "++" button. The LCD will reply: "Are you sure". If you are, hold the **OPTION** Key and press the TOGGLE button, if not just hit the **ESC** key.

(25) Odd Fields The speed shown in percentage after the word "Under" will define the speed under which the V1 will only play odd fields. If you want to play odd and even fields at all speed, use the **TOGGLE** key to select 0%. For Slow Motion applications you must set this parameter to "0" and save it.

(26) Stop Chase The number of frames defined in this option menu will set the free-wheel of the chase mode between 1 and 10 frames or "0". When set to "0", the V1 will play the same field for the whole duration of the time code drop-out. When set to a value between 1 and 10, the V1 will play the same field for the specified amount of frame(s) before it stops and wait for the new time code to chase. This function is useful to reduce the audio noise during the chase command. If you know that your source does not have drop-outs in the time code, set this value to 1.

(27) Fast Mode Select between normal and enhanced. Enhanced mode will provide the best video preview in Fast Forward and Fast Rewind
- Set Fast Mode to Enhanced on all single channel units, the V1x2 with dual-drives and the V1-MP2 in one channel mode.
- Set to Normal for units connected to the V1Xserver and multi-channel units like the V1x2-1r2p, V1MP2-1r2p, V1-UHD-1r2p.

(28) Jog Speed Sets the maximum speed in Jog mode to 100% or no limit.

(29) Still Mode Sets the mode of the V1 stop mode to either show a field/frame from the drive (Still) or show the image present on its input (EE). In EE mode, pressing Stop more than once will show the image from the drive.

(30) File Type The use of this Option Menu is necessary to define the SCSI ID of the active disk and to create a file system that uses multiple disks (RAIDSET) in the Multi File system mode. The selections are:

Single File or Multi File	See Section for definition of Single file and Multi-file systems. >For DCT and MPEG-2 use Single File (SFS) >For Uncompressed use Multi File (MFS) or see UncompSD note below.
Disk-1	Sets the SCSI ID of the active disk (Single File) or SCSI ID of the first disk in the RAIDSET (Multi File)

Stripe On	Sets the number of disks in the RAIDSET. Use “1” for Single File.
#RaidSets	Sets the number of RAIDSET to be defined. This parameter should be set to “1”.

UncompSD ONLY: If the V1-U is equipped with the fast ST318452 or ST336752 drives, it can be initialized in Single File system, which does not allow striping but allows daisy chaining and allows for the clips to be saved on the drive. If the V1-U is not equipped with these drives or other newer drives that are certified by Doremi, only MFS should be used.

UncompHDTV ONLY: The V1-UHD unit can use two SCSI bus in striping mode to allow max possible performance as required when audio insert has to be done while video is playback. For this unit the Menu entry is :

Multi File:
Bus :1 Use Single Bus
Bus :1 + 2 Use 2 Buses
Stripe On: Sets the TOTAL number of disks in the RAIDSET. minimum 3 using 15Krpm Cheetah.
#RaidSets: Sets the number of RAIDSET to be defined. This parameter should be set to “1”.
Bus:1 Id: xx : Sets the first SCSI ID of bus 1 – all other IDs should be consecutive to the first
Bus:2 Id: xx : Sets the first SCSI ID of bus 2 – all other IDs should be consecutive to the first

If you try to initialize a unit and if the drives installed do not match the parameters set in this option menu, you will get a message “Failed check MD”.

(31) Port Setup Defines the protocol used on the RS422 PORT1 and RS422 PORT2 located on the back of the unit. Each port can be individually set to emulate:
P2 Protocol: Sony P2 protocol at 38400 bauds
LD Protocol: Pioneer Laser Disk Protocol at 4800 or 9600 bauds.

(32) Audio lvl Sets the audio input level for each analog audio channel separately. Press TOGGLE to increase the level, press OPTION and TOGGLE to decrease the level.

(33) GPIO Port Is used to enable or disable the GPIO for units that have the GPIO option board installed. If the Option board is not installed, this option menu should be disabled. A future software release will allow the user to specify the functions of the 3 GPIs and GPOs. In the current software the 3 GPIs are set to:

GPI 1: Play previous available segment (= Pin 1 to set at GND level),
GPI 2: Reset segment number to 0 (= Pin 7 to set at GND level),
GPI 3: Play next available segment (= Pin 3 to set at GND level).

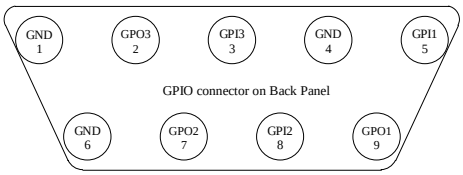

GPI inputs are TTL ACTIVE LOW signals to be controlled by closing contacts: Contact closed (Between GPI & GND) = Level 0 on that GPI = Command as listed
(*Open GPI has a voltage of TTL high level so between 3.5 & 5V*)

The V1 will also send a trigger to output pin 1, pin 2 or pin 3 after it completes the playback of a segment. The pin number is determined by the remainder value when dividing the segment number by the number three.

(34) **Set IP** Allows the user to change the IP address of the V1. To enter a new IP address, type it in 3 digit blocks. To jump from one block to the other hit the BKSP. If you are using the RCV2 front panel, you can hit CLEAR before typing the IP address. When you are done entering the new IP address you need to hit ENTER, then save the new IP to flash using Option Menu 4. You need to restart the unit to use the new IP address.

(35) **HD I/O** **>>UncompHDTV ONLY** Select between **"non segmented"** and **"segmented"** frame. When set to segmented frame the V1-UHD will record and output segmented frame HD video (sf).

(36) **Record At** This menu option allows you to quickly set the V1 to begin recording at the end of the drive where no video material has been recording. Thus preventing you from accidentally recording over existing video. Select between "Record at Current Position" and "Record at End of File"

4.3 Controller Menu

The front panel controls of the V1 are called the “RCV2 controller”. The RCV2 controller communicates with the V1 via RS-422. The controller has several unique functions. To call up the Controller Menu hold the ESCAPE button and press the menu up ⇧ arrow key (or down key ⇩). Use the arrow keys to scroll through the menu selections. The **TOGGLE** button changes the parameters for the selected menu. Press **TOGGLE** to increase the parameter and hold **OPTION** and **TOGGLE** to decrease the parameter.

To disable the RCV2 and prevent accidental operation, hold the OPTION button then press ESCAPE. Press again to unlock the RCV2. When the RCV2 is in “disable mode” the letters “DIS” will be displayed in the top right corner of the 4 line LCD.

The RCV2’s functions are described below:

(00)	**RCV2 Version**	Displays the firmware version number for the V1 motherboard..
(01)	**Video**	Use the TOGGLE button to switch the front panel LCD monitor “on” or “off”. Default is “on”
(02)	**Composite Out**	**For V1-UHD only.** Switches the composite output on the rear panel of the V1-UHD “on” or “off”. Default is “on”.
(03)	**Burn In Window**	When ON, the burn in window will be enabled on the confidence LCD monitor (it needs to also be enabled in the Option Menu setting). Defualt is “on”.
(04)	**Delay Mode**	**Dual-channel V1 configured for single drive operation or V1-MP2 only**. This is used for broadcast delay to define the time delay between the recorder and the player(s). Ensure that the V1 is not recording. Select the player (channel 2) and enter the delay time desired and press ENTER. The record and play channel will locate to 0 time code, the recorder will start recording and the player will wait for the time set for delay to elapse, and will then start playing back automatically. The transport controls on the player (channel 2) will be disabled when the time delay function is engaged. To stop the delay function select the recorder (channel 2) and press STOP. Default is “off”.
(05)	**Preroll**	Used in conjunction with Slomo Mode (See below). When a time value is entered the RCV2 identifies the pre-roll time from the location point. This helps to compensate for the delay between the action being recorded and the push of the save button.
(06)	**Slomo Mode**	**Dual-channel V1 configured for single drive operation or V1-MP2 only** . Used for sports slow motion replay applications. When ON, the RCV2 operates like a slow motion controller.

Select Channel 1. Go to the start of the disk by pressing CLEAR then press GOTO, then start recording.
Select Channel 2 and press the Record button to go in EE mode.
When you see an event worth marking press SAVE, this will increment the Clip number and save the IN point of the clip minus the Preroll value setting. (see Preroll above)
Every time you hit SAVE, the clip number will increment and the new time code will be captured.
If you want to recall a specific segment press the ++ or – buttons until you see the desired clip number displayed, then press RECALL. (You can do this while in EE mode)
When you press SloMo, the unit will start playing from that point at the slow motion speed selected by the Shuttle wheel.
To stop and go back in EE, press STOP followed by the RECORD button.
Default is “off”.

(07) Gang Mode **Dual-channel V1 only or control of two single channel V1 decks.** When ON, it will insure that both channels are always at the same time code location. Used to synchronize the recording and playback operation of two channels. Default is “off”.

(08) 4224 Clip Mode **Dual-channel V1 only or control of two single channel V1 decks.** For applications such as logo insertion plus key. This mode was created so people can record Logo plus Key separately, then find the in points and make clips that are locked together.

In this mode the RCV2 will insure that all clips are created with the same duration on both channels, the only distinction is that the IN and Out points will be different.

Define the IN and OUT on Channel 1, then define the IN only on channel 2 and hit SAVE clip# ENTER. The RCV2 will automatically calculate the duration from channel 1 and create an equal length clip on channel 2. When you RECALL clip# ENTER, the unit will play both clips synchronously even if they don't have the same start time. Default is “off”.

5 Recording & Playback

5.1 RECORDING

5.1.1 Standard (Crash) Recording Procedures

Pressing the **REC** button on the front panel will automatically put the V1 into "RECORD READY" mode or "INPUT MONITOR" mode, the red LED will go ON. This is useful for monitoring the input audio and video before you record. To turn "INPUT MONITOR" OFF press **STOP**.

To begin crash recording (Video + Audio + Time Code) from "STOP" or "RECORD READY" modes, hold down **REC** and press **PLAY**, both green and red LEDs will go ON simultaneously.

5.1.2 Overdubbing Video & Audio Tracks using V1 Remote or VTPpro

To overdub both video and audio on a section of your disk, you need to execute the **Chase Command** by holding the **OPTION** key while pressing **PLAY** *(See Section 5.2.1, "CHASE command").*

- Use Option Menu (02) **Edit Preset** and select **Assemble ON**.
- Both, the source machine and the V1, **should be synchronized** to the same reference (House Sync) and time code should be fed from the source machine into the **TIME CODE IN** of the V1.
- Execute the Chase command by holding down the **OPTION** key and pressing **PLAY**
- Place the V1 into "INPUT MONITOR" by pressing the **REC** button
- Begin playback of the source machine before the section that you want to overdub. The V1 will begin playing as soon as it sees time code that matches what is on the current disk. Wait until the V1 LCD shows **PLAY** with a black dot, this indicates that the V1 is playing in sync and chasing the time code from the source machine.
- When you reach the point where you want to punch in, hold down **PLAY** and press **REC** to start recording. Press **PLAY** or **STOP** to stop overdubbing.

5.1.3 Overdubbing/Insert of Video or Audio Only

This feature allows the insert/overdub of selected audio track(s) and/or video on existing recordings while the other track(s) will be monitored at the same time. Since insert mode requires fast disk drives, it is recommended that you use the fastest drives available on the market, at the time this manual was printed the fastest drives are ST318452, ST336752 and ST373405. For the V1-U, you need at least 2 drives to successfully insert at 8 or 10 bit resolution. Users who want to use this feature with other drives should test at 8 bit resolution. For the DCT and MPEG2 V1s those drives can do all bit rates.

To use this feature:

- Use Option Menu (03) **Edit Preset** to select which audio track(s) you want to insert.
- Provide the same House Sync to the source machine and the V1.
- Connect the time code out from the source machine into the TIME CODE IN of the V1.
- Begin playback of the source machine before the section that you want to insert on the V1.
- Hold down **OPTION** and press **PLAY** (Chase Command) to engage synchronized playback with the source, wait until the V1 LCD shows "PLAY" with a black dot (This indicates that the V1 is now in sync with the source), then hold down **PLAY** and press **REC**. The V1 will record the insert. Then press **STOP** or **PLAY** to end the insert segment procedure.

5.1.4 Time Code Offset

This function will allow you to offset your time code track starting at any location (frame) on the disk. NTSC users should first select their time code frame rate from the **Drop Frame** menu option (Drop or Non Drop). To enter your **Time Code Offset** locate to any position on the drive, manually enter the new time code desired at that location and then hold down the **OPTION** key while hitting the **IN** key. The Time Code offset will be permanently saved on the drive.

This Time Code Offset function is useful to transform an Absolute Time track into a Time Code track; once the right offset is set for a recording done in A-Time, it will behave as if time code was recorded on the drive.

5.2 SPECIAL PLAYBACK FUNCTIONS

5.2.1 OPTION PLAY Command or Chase Command

To execute a Chase command, you should hold down the **OPTION** key and press **PLAY**. Both the source machine and the V1 **should be synchronized** to the same source of House Sync and the time code should be fed from the source machine into the LTC IN of the V1. Begin playing the source machine. The V1 will begin playing as soon as it sees time code that is within the range defined for the active drive and will continue playing **in stand alone mode**, so a stop on the incoming LTC will not stop the V1. This Chase command is different from the Chase to LTC mode *(See Section 5.2.2, "Chase to LTC", in that **mode**, the V1 will stay locked to the incoming LTC).* Note that during **OPTION PLAY**, the V1 LCD displays **PLAY** with a black dot to indicate that the play is in sync with the source.

5.2.2 CHASE to LTC Time Code mode

To put the V1 into the "Chase to LTC" mode, change the menu (03) to "Chase to LTC". Both the source machine and the V1 **should be synchronized** to the same source of House Sync and the time code should be fed from the source machine into the LTC IN of the V1. Begin playing the source machine. The V1 will begin playing as soon as it sees time code that is within the range defined for the active drive and will continue to play LOCKED to the incoming LTC, so a stop on the incoming LTC will also stop the V1. Note that during this chase play, the V1 LCD displays "VAR" to indicate that it can chase at different speeds.

5.2.3 CHASE to RS422 or Serial Time Code mode

This mode requires a special cable described in section 9.4
To put the V1 into the Chase to RS422 or Serial Time Code mode, change the menu (03) to Chase to **Serial TC**. Both the source machine and the V1 **should be synchronized** to the same source of House Sync and the time code should be fed from the source machine into the RS422 port of the V1. Begin playing the source machine (DAW). The V1 will begin playing as soon as it sees a time code within the range defined for the active drive and will continue to play LOCKED to the incoming RS422 timecode. Note that during this chase play, the V1 LCD displays "VAR" to indicate that it can chase at different speeds.

NOTE 2 : **Don't put the menu (03) Chase on "RS422" to have a standard RS422 control operation on the V1. The standard RS422 control is done with menu (03) Chase in the OFF position.**

5.2.4 CHASE to BI-PHASE mode

To put the V1 into the Chase to Biphase mode, 3 steps are required :

- Make sure that PORT2 is set to MIDI/BIPHASE. All 9 jumpers on J34 should be set to the MIDI+BIPHASE position. Units are shipped as PORT2 set to SERIAL PORT by default.
- Select the frequency input using Option Menu (18) "Clks/Frame".
- Change the menu (03) to "Chase to Biphase" and menu (01) to "A-Time" (*Refer to Section 4.1*).

Both the source machine and the V1 **should be synchronized** to the same source of House Sync and the Biphase signal should be fed from the source machine into the second RS422 port of the V1. Locate the source machine at a reference position, locate also the V1 to the same reference position (frame) and then enter the required Time code Offset on the V1 (*Refer to Section 5.1.4*). Begin playing the source machine. The V1 will begin playing in chase and will continue to play LOCKED to the incoming Biphase signal, so a stop on the incoming Biphase will also stop the V1. Note that during this chase play, the V1 LCD displays "VAR" to indicate that it can chase at different speeds.

5.2.5 Segment (Clip) Definition and Playback

A segment (also called clip) is a valid recording on the active drive defined by a time in and a time out. Up to 2047 segments can be defined on the V1. To define a segment, press **IN** where you want the in point to be and press **OUT** where you want the out point to be. You may enter these values on-the-fly while you are playing or you can locate to each point individually (Enter timecode and push **GOTO** or locate command on RS422) and enter the in and out points separately. Press **SAVE** and enter a number from **001 to 2047** to identify the segment and then press **ENTER**. If you want to define the segment that will play directly after the one you have just entered, before you hit **ENTER** press the up arrow key and enter the next segment (you can also define the previous segment) then press **ENTER**. To recall any defined segment for playback, press RCL, enter the number of the segment from **001 to 2047**, and then press **ENTER**. The segment will play automatically and the LCD will display the segment information as indicated in the following section.
CAUTION NOTE : The V1 will not save any segment number above 2047 and will also not save segment number 000.

When you start entering a clip (segment) number, the V1 will locate to that clip after a certain delay. If you don't want the V1 to locate to those intermediate clip numbers, you should enter the whole number quickly. If a clip does not exist, the V1 will locate to the start of the disk.

5.2.6 Play List & Looping

Once the segments are fully defined as described above, a play list can be defined to automatically chain or loop segments during playback. In order to implement this list, each segment requires the definition of a "next segment" parameter and, optionally, a "previous segment" parameter.

To define the next segment :

- Press **RCL**, enter the number of the segment to modify, press ++, the LCD will display "**Next Seg : sss**", enter the segment number of the clip you want to play next and press **ENTER.** Note that your are only allowed to enter valid segment numbers. If the current segment is equal to the next segment then you have defined an infinite **LOOP** (until you hit STOP).
- Do that for each segment you want to chain.

Define a previous segment only when you want to insert a segment into an existing play list.

- Press **RCL** and enter the number of the segment to be inserted, press --, the LCD will display "**Prev Seg : sss**", enter the segment number that will precede it in the play list and press **ENTER.** Note that your are only allowed to enter valid segment numbers.
- Press **RCL** and enter the number of the segment to be inserted, press ++, the LCD will display "**Next Seg : yyy**", enter the segment number that will follow in the play list and press **ENTER.** Note that your are only allowed to enter valid segment numbers.

Examples:

To play the following list of segments: (4, 3, 8, 1, 4) the 4 at the end will cause the V1 to loop.
Once all these segments have been defined with the **IN**, **OUT** and **SAVE**:

Press RCL 004	▲	Next Seg	=	003	ENTER
Press RCL 003	▲	Next Seg	=	008	ENTER
Press RCL 008	▲	Next Seg	=	001	ENTER
Press RCL 001	▲	Next Seg	=	004	ENTER

To insert segment 5 in the play list: (4, 3, 8, **5**, 1, 4)

Press RCL 005	▼	Prev Seg	=	008	ENTER
Press RCL 005	▲	Next Seg	=	001	ENTER

The "Previous Segment" is only used to insert a segment in a previously defined play list. The V1 will automatically display the previous segments for each play list item when you recall the segment and move to "Prev Seg".

Note 1: The segment definition and playback feature allows the user to define more than one play list, as long as the segment numbers do not conflict. i.e. the user can define: Play list A: (5, 4, 3, 2, 1, 5)and Play list B: (10, 9, 8, 7, 10). To play list A, the user can recall any segment from that list (1, 2, 3, 4 or 5) or play list B by recalling any segment from that list (7, 8, 9 or 10).

Note 2: A list can be modified during playback. This is useful to allow jumps from one list to the other. If we use the 2 play list defined in **Note 1**, if during playback of list one, the user Recalls segment 2 and enter 10 as the next segment (instead of 1), the V1 will jump from list 1 to list 2 as soon as it finishes playing back segment number 2.

Note 3: A segment can also be used as a marker. Locate to the point you want to put a marker on, hit the **IN** key followed by the **OUT** key and save the segment number as "**sss**" (do not define an **OUT** point). Any time you recall segment "**sss**" the V1 will locate to that point and stops.

Note 4: The Segment definition uses the A-Time as a reference, this means that even if you set a Time Code Offset, your segments will not change, they will only display the new time code when played.

5.2.7 Remaining Time of a Segment During Playback

When you RECALL a segment or a play list, the LCD will display the segment number playing back along with the remaining time up to the OUT point of that segment in the following format:

sss : MM.SS

Where **sss** is the segment number played from 001 to 2047 and **MM.SS** is the remaining time up to the OUT point in mn:sec.

5.2.8 Reverse Play

To play video and audio in reverse at normal speed, hold the **OPTION** key and press **REW**. You may also press the WHEEL button and go into SHUTTLE at the same reverse play speed.
During reverse play, the LCD will display : " << **100%** **JOG** ".

5.3 USING DISCONTINUOUS TIME CODE ON A DRIVE.

5.3.1 Increasing Time Code

If your drive is divided for example into 3 different projects, where the first project on the recorded on the drive goes from 01 00 00.00 to 01 10 00.00, the next from 02 00 00.00 to 02 15 00.00 and the third from 03 00 00.00 to 03 12 00.00, you can switch between projects just by locating to any time code location within the destination project.

5.3.2 Non-Increasing Time Code

If your drive is divided for example into 3 different projects, where the first project on the recorded on the drive goes from 02 00 00.00 to 02 15 00.00, the next from 01 00 00.00 to 01 10 00.00 and the third from 03 00 00.00 to 03 12 00.00, you can switch between projects using two different methods:

- Use the REW or FF until you get to the destination project.
- We recommend defining a segment for each project and select the desired project from the (**Clip Menu 08**).

5.3.3 Repeating Time Code

If your drive is divided for example into 3 different projects recorded using the same time code, you can switch between projects using two different methods:

- Use the REW or FF until you get to the destination project. The only way you would recognize the project is by looking at the video because the LCD display will give you the same time code for all three project. Not recommended.
- We recommend defining a segment for each project and select the desired project from the (**Clip Menu 08**).

6 Controlling the V1 from a PC or Mac

To control the V1 from a PC or Mac, you can use the VTPro software included with the V1 package and posted on our support page at http://www.doremilabs.com. The manual for VTPro is usually in pdf format and included with the VTPro compressed file.

For playlist management on a PC, you can use the VTQList software posted on our web site. VTQList has an extensive help menu that you can print as a manual.

7 Upgrading the V1 firmware

The V1 firmware can be checked by going to the OPTION MENU (hold the option button then press the menu button). Scroll to *Version No* by pressing the down arrow key when you reach Option Menu 00.

The V1 firmware can be upgraded from a PC or Mac using the Vuploader utility included with the V1 package and posted on our support page at: http://www.doremilabs.com.

Software upgrades are usually posted on our web site:
For DCT units (V1, V1m, V1d, V1x2) the file name should start with DCT
For MPEG2 units (V1-MP2) the file name should start with MPEG2
For standard definition uncompressed (V1-U) the file name should start with V1-U
For high definition uncompressed (V1-UHD) the file name should start with UHD

The manual for Vuploader is included in pdf format with the Vuploader compressed file.

8 Upgrading the RCV2 firmware

All silver V1 decks have two firmwares, one for the V1 motherboard and another for the front panel (the RCV2).

8.1 Checking your RCV2 firmware version

Enter the Controller Menu by holding the **ESCAPE** button and pressing **MENU.** Scroll to *Firmware*.

8.2 The VUploader utility

The RCV2 can be upgraded using the VUploader utility version 1.08 or higher. Download the VUploader utility from www.doremilabs.com in the support page.

Connect the 9pin cable between the RCV2-9P port labeled RS422 (1-2) (do not use the port labeled RS422 (3-4)) to any of the ports on the back panel of your V1 deck.

Check that your V1 is running firmware version 4.16c or higher. If not use VUploader to upgrade it first.

Power up the unit while holding the Channel 1 button under the 4 line LCD display, you should see a message saying "Flash mode"

Run VUploader. For detailed instructions see the VUploader README file that comes with VUploader.

When you receive the message from VUploader asking to select a port, choose the RS422 port that you connected to on the back of the V1.

9 Wiring Diagrams and Pinouts

9.1 Wiring of the V1 RS422-PC Cable

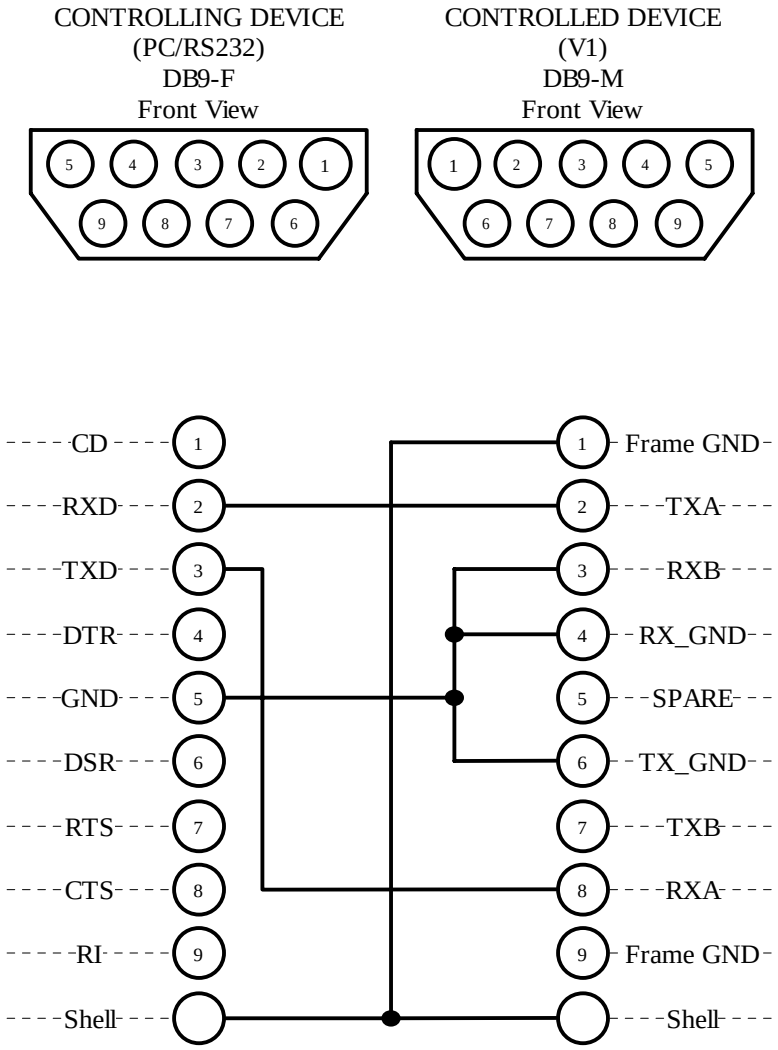

Wiring List: V1 (1) to V1 Shell to PC Shell
V1 (2) to PC (2)
V1 (8) to PC (3)
V1 (3 + 4 + 6) to PC (5)

Note: For a true RS422 connection, you can use an adapter made by KK Systems (Part Number K422-99). This adapter connects to the RS232 port on the PC and provides an RS422 connection on the other side. To connect the K422-99 to the V1, use a standard RS422 cable (See wiring of the standard RS422 cable). A true RS422 connection allows for a better connection and longer cables.

9.2 Wiring of the V1 RS422-Mac Cable

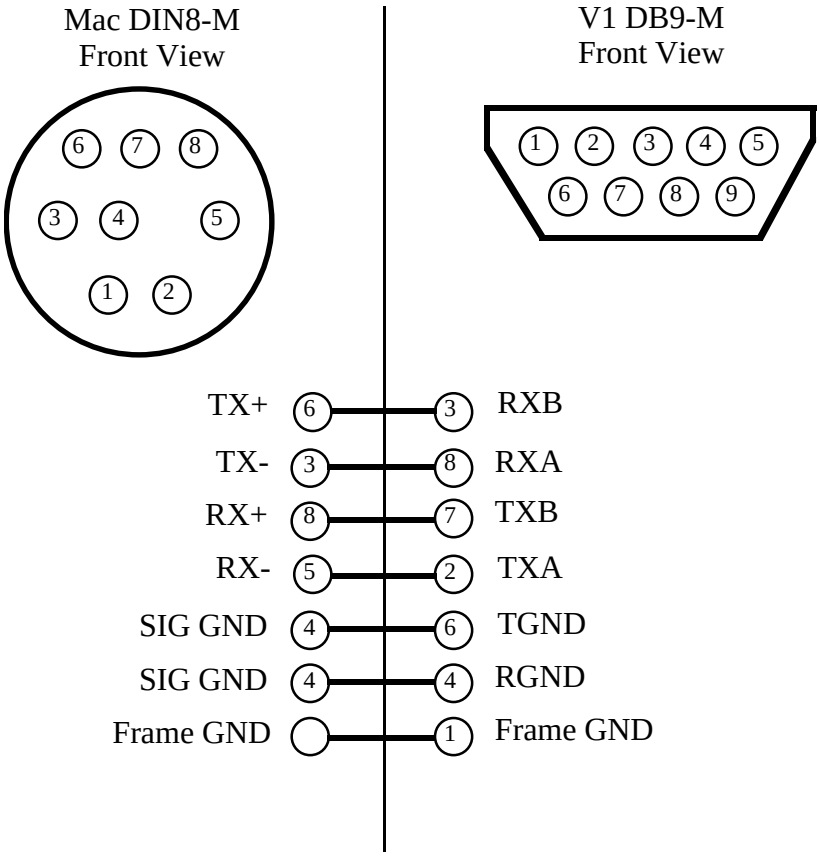

9.3 Wiring of the standard RS422 Cable

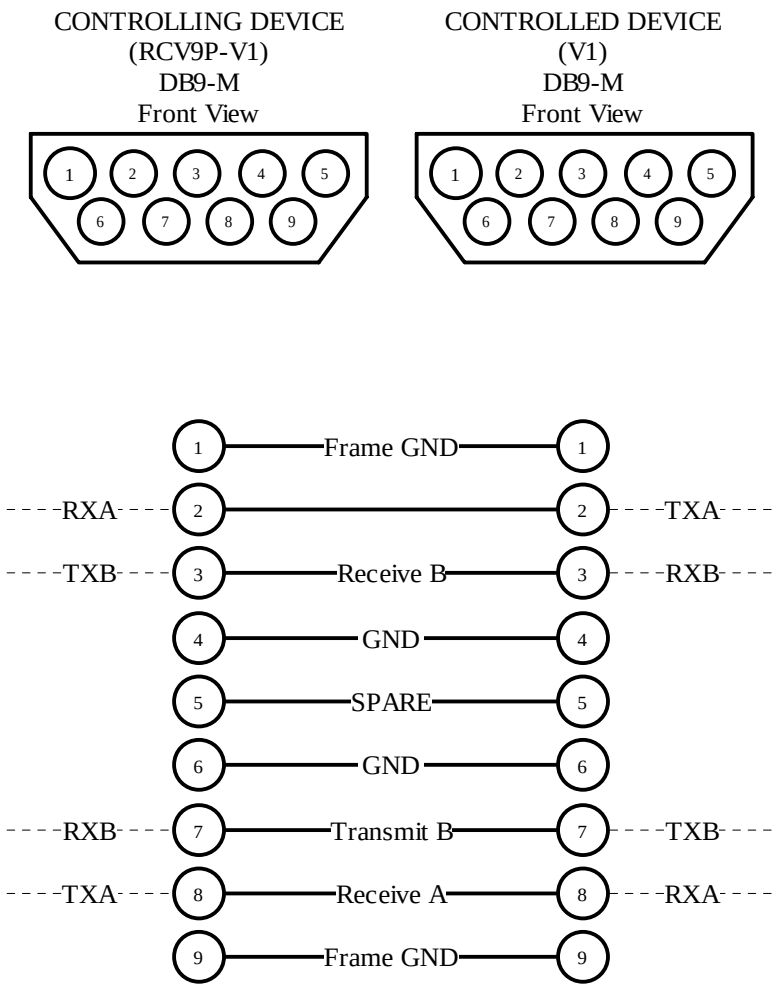

9.4 Wiring of the RS422 Chase cable

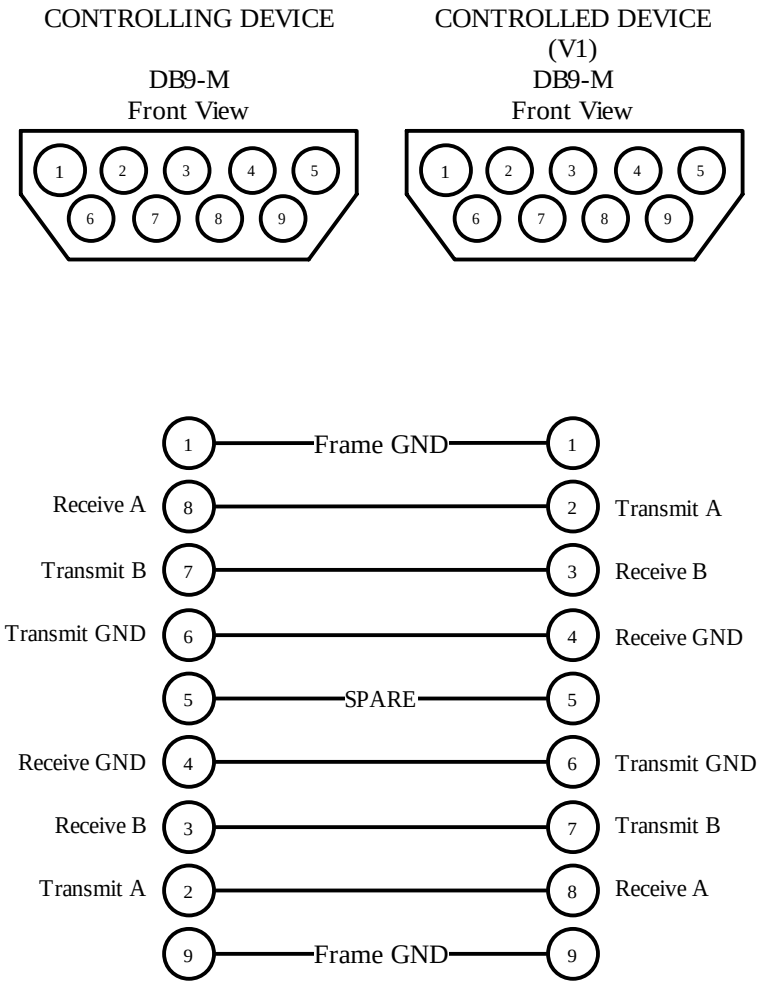

9.5 GPIO Connector Pinout

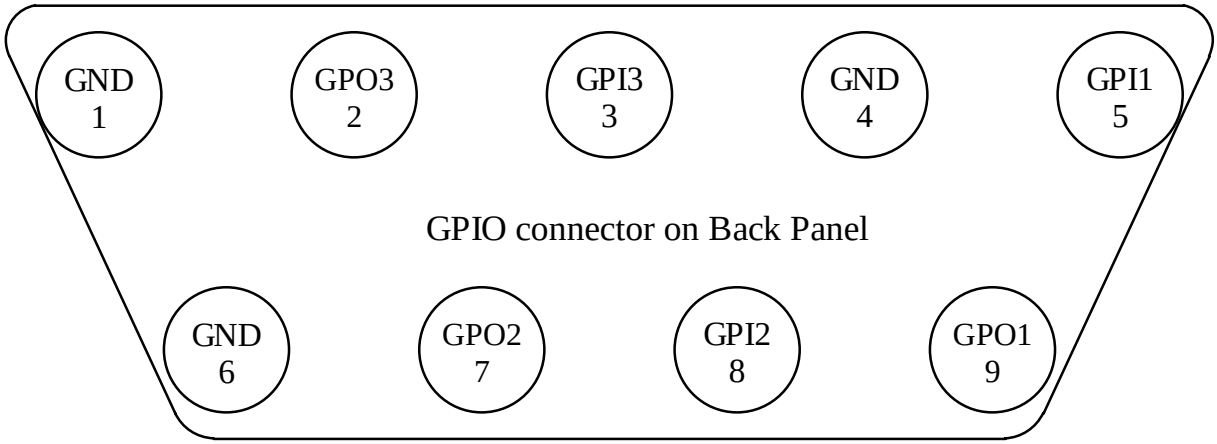

9.6 MIDI and Biphase Connector Pinout:

Pin 5: +5V will provide a 5V power signal
Pin 4: Biphase S signal
Pin 9: Biphase R Signal
Pin 1: Ground Signal
The rest of the pins are used for MIDI chase, which is still not implemented.

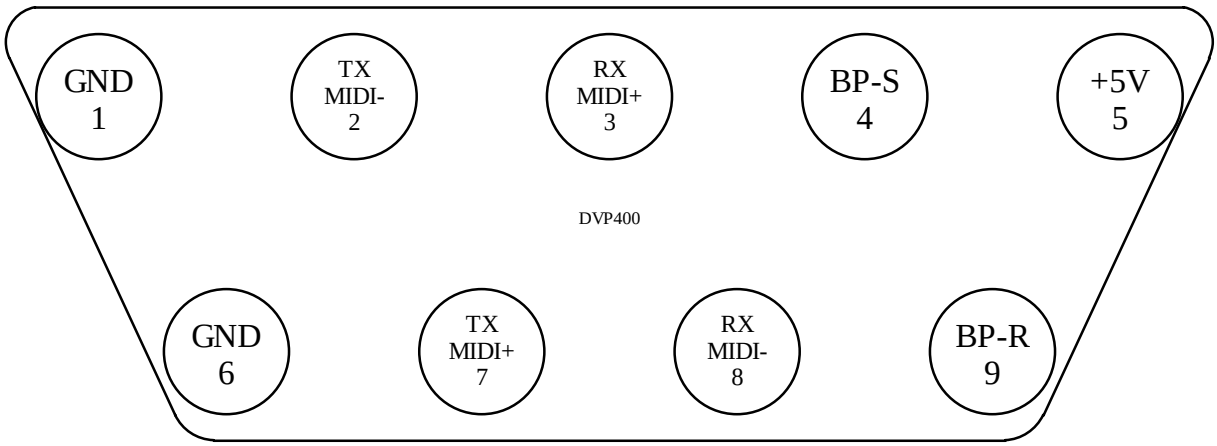

10 DISK RECORD TIME / COMPRESSION CHARTS

10.1 *DCT Compression Chart*

(H:M:S)
NTSC DCT Compression according to CCIR-601

Compression Ratio	18GB	36GB	73GB	147GB	180GB	1.2TB	1.8TB
						External Drive Chassis	
2:1	27:38	0:55:16	1:50:32	3:41:04	04:36:20	30:04:38	45:06:56
2.5:1	34:16	1:08:32	2:17:04	4:34:08	05:42:40	37:17:49	55:56:44
3:1	39:48	1:19:36	2:39:12	5:18:24	06:38:00	43:19:11	64:58:47
3.5:1	47:28	1:34:56	3:09:52	6:19:44	07:54:40	51:39:52	77:29:48
4:1	56:06	1:52:12	3:44:24	7:28:48	09:21:00	61:03:40	91:35:31
5:1	1:04:56	2:09:52	4:19:44	8:39:28	10:49:20	70:40:33	106:00:49
6:1	1:17:08	2:34:16	5:08:32	10:17:04	12:51:20	83:57:17	125:55:55
7:1	1:28:10	2:56:20	5:52:40	11:45:20	14:41:40	95:57:49	143:56:44
8:1	1:42:50	3:25:40	6:51:20	13:42:40	17:08:20	111:55:39	167:53:28
9:1	1:52:12	3:44:24	7:28:48	14:57:36	18:42:00	122:07:21	183:11:01
10:1	2:03:24	4:06:48	8:13:36	16:27:12	20:34:00	134:18:47	201:28:10
12:1	2:17:08	4:34:16	9:08:32	18:17:04	22:51:20	149:15:39	223:53:28
14:1	2:34:16	5:08:32	10:17:04	20:34:08	25:42:40	167:54:33	251:51:50
16:1	2:56:20	5:52:40	11:45:20	23:30:40	29:23:20	191:55:39	287:53:28
20:1	3:25:42	6:51:24	13:42:48	27:25:36	34:16:60	223:53:28	335:50:12
24:1	4:06:50	8:13:40	16:27:20	32:54:40	41:08:20	268:39:44	402:59:36
34:1	5:08:34	10:17:08	20:34:16	41:08:32	51:25:40	335:51:18	503:46:56

PAL DCT Compression according to CCIR-601

Compression Ratio	18GB	36GB	73GB	147GB	180GB	1.2TB	1.8TB
						External Drive Chassis	
2:1	27:40	0:55:20	1:50:40	3:41:20	04:36:40	30:06:48	45:10:12
2.5:1	33:40	1:07:20	2:14:40	4:29:20	05:36:40	36:38:38	54:57:58
3:1	44:44	1:29:28	2:58:56	5:57:52	07:27:20	48:41:22	73:02:02
3.5:1	50:50	1:41:40	3:23:20	6:46:40	08:28:19	55:19:44	82:59:36
4:1	56:56	1:53:52	3:47:44	7:35:28	09:29:20	61:58:06	92:57:09
5:1	1:07:18	2:14:36	4:29:12	8:58:24	11:12:59	73:15:06	109:52:39
6:1	1:17:56	2:35:52	5:11:44	10:23:28	12:59:20	84:49:31	127:14:17
7:1	1:26:28	2:52:56	5:45:52	11:31:44	14:24:39	94:06:48	141:10:12
8:1	1:38:44	3:17:28	6:34:56	13:09:52	16:27:20	107:27:53	161:11:50
9:1	1:53:56	3:47:52	7:35:44	15:11:28	18:59:20	124:00:33	186:00:49
10:1	2:03:26	4:06:52	8:13:44	16:27:28	20:34:20	134:20:57	201:31:26
12:1	2:28:06	4:56:12	9:52:24	19:44:48	24:41:00	161:11:50	241:47:45
14:1	2:44:34	5:29:08	10:58:16	21:56:32	27:25:40	179:07:13	268:40:49
16:1	3:05:08	6:10:16	12:20:32	24:41:04	30:51:20	201:30:20	302:15:31
20:1	3:31:36	7:03:12	14:06:24	28:12:48	35:15:60	230:18:47	345:28:10
24:1	4:06:52	8:13:44	16:27:28	32:54:56	41:08:40	268:41:54	403:02:51
34:1	4:56:14	9:52:28	19:44:56	39:29:52	49:22:20	322:25:51	483:38:47

Restrictions:

Due to drive speed variations, the following drives should not have a total record time lower than the value specified in this table:

Due to drive speed variations, the following drives can only be used at the compressions specified in this table:

Drive type	ST34371N/W ST34572N/W ST19171N/W	ST34501N/W ST19101N/W	ST34573N/W/LW ST39173N/W/LW ST39175LW ST118273N/W/LW ST318275W/LW ST136475LW ST150176LW All newer Barracuda	ST34502LW ST39102LW ST39103LW ST118202LW ST318203LW ST136403LW ST373405LW All newer Cheetah
Minimum Compression Ratio (2 Fields)	4:1 or higher	3:1 or higher	2.5:1 or higher	2:1 or higher

10.2 MPEG2 Compression Chart

(H:M:S)

NTSC MPEG2 Compression at 720x480

Compression Bit Rate	18GB	36GB	73GB	147GB	180GB	1.2TB	1.8TB
						External Drive Chassis	
50 Mbit/s	0:40:46	1:21:32	2:43:04	5:26:08	6:47:40	44:22:19	66:33:28
45 Mbit/s	0:45:14	1:30:28	3:00:56	6:01:52	7:32:20	49:14:01	73:51:01
40 Mbit/s	0:50:38	1:41:16	3:22:32	6:45:04	8:26:20	55:06:40	82:40:00
35 Mbit/s	0:57:41	1:55:22	3:50:44	7:41:28	9:36:50	62:47:04	94:10:37
30 Mbit/s	1:06:46	2:13:32	4:27:04	8:54:08	11:07:40	72:40:16	109:00:24
25 Mbit/s	1:19:17	2:38:34	5:17:08	10:34:16	13:12:50	86:17:41	129:26:32
20 Mbit/s	1:38:02	3:16:04	6:32:08	13:04:16	16:20:20	106:42:11	160:03:16
15 Mbit/s	2:07:33	4:15:06	8:30:12	17:00:24	21:15:30	138:49:48	208:14:42
12 Mbit/s	2:36:41	5:13:22	10:26:44	20:53:24	26:06:50	170:31:50	255:47:45
10 Mbit/s	3:04:15	6:08:30	12:17:00	24:34:00	30:42:30	200:32:39	300:48:59
8 Mbit/s	3:43:35	7:27:10	14:54:20	29:48:40	37:15:50	243:21:22	365:02:02
5 Mbit/s	5:26:13	10:52:26	21:44:52	43:29:44	54:22:09	355:03:57	532:35:55

PAL MPEG2 Compression Chart at 720x576

Compression Bit Rate	18GB	36GB	73GB	147GB	180GB	1.2TB	1.8TB
						External Drive Chassis	
50 Mbit/s	0:40:48	1:21:36	2:43:12	5:26:24	6:48:00	44:24:29	66:36:44
45 Mbit/s	0:45:13	1:30:26	3:00:52	6:01:44	7:32:10	49:12:56	73:49:23
40 Mbit/s	0:50:41	1:41:22	3:22:44	6:45:28	8:26:50	55:09:56	82:44:54
35 Mbit/s	0:57:40	1:55:20	3:50:40	7:41:20	9:36:40	62:45:59	94:08:59
30 Mbit/s	1:06:53	2:13:46	4:27:32	8:55:04	11:08:50	72:47:53	109:11:50
25 Mbit/s	1:19:35	2:39:10	5:18:20	10:34:40	13:15:50	86:20:57	129:31:26
20 Mbit/s	1:38:15	3:16:30	6:33:00	13:06:00	16:22:30	106:56:20	160:24:29
15 Mbit/s	2:08:22	4:16:44	8:33:28	17:06:56	21:23:40	139:43:08	209:34:42
12 Mbit/s	2:37:05	5:14:10	10:28:20	20:56:40	26:10:50	170:58:30	256:27:45
10 Mbit/s	3:03:40	6:07:20	12:14:40	24:29:20	30:36:39	199:54:33	299:51:50
8 Mbit/s	3:43:10	7:26:20	14:52:40	29:45:20	37:11:40	242:54:09	364:21:13
5 Mbit/s	5:27:06	10:54:12	21:48:24	43:36:48	54:31:00	356:01:38	534:02:27

Note: This table is compiled for video at the indicated bit rate with 2 audio channels.
You can use any Seagate Cheetah hard disk that ends with the extension LW or a Barracuda 180gig.
If you are planning to do insert editing, use only Cheetah 15000 RPM drives (X15) like the ST318452 and ST336752

10.3 Standard Definition Uncompressed Chart

	Uncompressed Recording Time			
Model Number	Drive Size	Drive Qty	8Bit	10Bit
V1-Ux2-23 *per channel*	36 GB	1	0:29:03	0:23:21
V1-U-46	36GB	2	0:58:07	0:46:43
V1-U-93	73 GB	2	1:56:14	1:33:25
V1-U-186	147 GB	2	3:52:28	3:06:50
	With External Storage Chassis			
1.2TB	1200GB	1	15:48:50	12:42:35
1.8TB	1800GB	1	23:43:15	19:03:52

10.4 High Definition Uncompressed Chart

HD Model		*14R*	*29R*	78	31T	62E	125E	*219E*
		removable	removable	fixed	fixed			
	Drive Size	36 GB	73 GB	147 GB	73 GB	73 GB	147 GB	147 GB
	Drive Qty	3	3	4	4	8	8	14
HD Format	*Bit*							
1080 50i	8	0:17:39	0:35:17	1:34:06	0:47:03	1:34:06	3:08:13	5:29:22
1080 50i	10	0:14:07	0:28:15	1:15:19	0:37:40	1:15:19	2:30:38	4:23:37
1080 60i	8	0:14:42	0:29:25	1:18:25	0:39:13	1:18:25	2:36:51	4:34:29
1080 60i	10	NA	NA	NA	0:31:22	1:02:45	2:05:30	3:39:37
1080 24p	8	0:18:23	0:36:46	1:38:02	0:49:01	1:38:02	3:16:05	5:43:09
1080 24p	10	0:14:42	0:29:25	1:18:26	0:39:13	1:18:26	2:36:51	4:34:30
1080 25p	8	0:17:39	0:35:18	1:34:07	0:47:04	1:34:07	3:08:14	5:29:25
1080 25p	10	0:14:07	0:28:15	1:15:19	0:37:40	1:15:19	2:30:38	4:23:37
1080 30p	8	0:14:42	0:29:25	1:18:25	0:39:13	1:18:25	2:36:51	4:34:29
1080 30p	10	NA	NA	NA	0:31:23	1:02:46	2:05:32	3:39:40
720 60p	8	0:16:27	0:32:54	1:27:44	0:43:52	1:27:44	2:55:28	5:07:03
720 60p	10	NA	NA	NA	0:35:20	1:10:39	2:21:19	4:07:18

V1-U: (46, and 93 versions) Use two DE300i-SWC160/B with Seagate Cheetah 15000RPM drives that end with the LC extension. If the V1-U is equipped with ST318452 or ST336752, it can be initialized in Single File system, which does not allow striping but allows daisy chaining and allows for the clips to be saved on the drive.
V1-U-231: Use two DE100i-SWC160/B
V1-UHD: Internal non-removable, use Seagate Cheetah 15000RPM drives that end with the LW extension
V1-UHD: External removable, use Seagate Cheetah 15000RPM drives that end with the LC extension.

11 USING THE RCV2-9P REMOTE CONTROL

To use the RCV2-9P remote controller with the V1, connect the provided RS422 cable between the RCV2-9P and any available RS422 port on the V1.

All functions available on the front panel of the V1 are available on the RCV2-9P except for the audio level meters that can only be viewed on the front panel (RCV2).

You can download the RCV2-9p manual from the support section of the Doremi website.

12 APPLICATION and TROUBLESHOOTING INFORMATION

12.1 Unable to control V1 remotely

If you have a normal RS422 9 pin control connection and you cannot control the V1, check the CHASE menu command. It should be set to **CHASE OFF** and **not** to **CHASE RS422**.

12.2 Quick toggle between SHUTTLE & JOG modes

While in SHUTTLE mode, you can still use the nudge keys "--" and "++" to JOG field by field.

12.3 Recording in case of tape drop-out

When recording with external timecode, two kinds of drop-out might occur:

- If the time code drops out but the video signal is still valid, the V1 will keep recording the timecode (it will free-wheel for 4 frames and then records any right or wrong time code fed on the TIME CODE IN jack) and the valid video signal.
- If the video signal is not valid, the V1 will 'pause' (stop recording but will stay in record mode) until the video signal becomes valid, then the V1 will continue recording. *This case may result in bad video/audio recording. We recommend using a TBC for video, and delay the audio by the same amount.*

12.4 V1 identification for DAW on the RS422 port

The V1 can reply with two different Machine Ids when connected to a controlling device like a Sony 9-Pin editor.

If OPTION MENU (19): EMULATION is set to BVW75, it will reply with a "BVW75" identification.

If OPTION MENU (19): EMULATION is set to V1 (default), the V1 will reply with a "V1" identification.

If OPTION MENU (19): EMULATION is set to DVW-500, the V1 will reply with a "DVW500" identification.

- **Caution note**: Some DAWs or Editors will not initialize the RS422 port correctly if the Id returned on the RS422 port is unknown by them. In this case, set the EMULATION to BVW75.

12.5 The unit is not playing smoothly in reverse play

This can be due to two factors:

- Low compression ratio: The drive caching is not effective in reverse play, that is why you would need to set the compression ratio to a higher value if your project requires smooth playback in reverse.
- Playing at the end of the drive: When the drive reads from its inner sectors, the transfer rate becomes lower, thus causing slower performance and not so smooth reverse playback. The remedy is to record with a higher compression.

12.6 The Video has no colors

If the video is not stable and is not displaying colors properly, you have set the **Sync From** to **Auto** or **Sync In** but you do not have a black burst signal (a composite signal is not accepted) fed to the **SYNC IN** connector. If the video stabilizes when you switch to **Internal**, the problem is definitely your **Sync From** setting.

12.7 No Audio from input monitor

If you cannot hear the audio when you go in input monitor, check the option menu setting for Source & Audio Level. (Option Menu 32)

12.8 Unable to write to active drive

If you are not able to write to your **active** drive, i.e. cannot record, initialize or format, check Option Menu (12) (**Unit Type)** and make sure you set it to **Recorder & Player**. You should also check Option Menu 5 (**SCSI Setup)** and make sure it is set to **Read/Write.**

12.9 Forcing power ON in any condition

The V1 can be set to remain on even if AC power is cycled OFF then ON again. To force a "**always ON**" operation please consult our tech support department.

13 CONNECTING V1 TO AUDIO WORKSTATIONS & EDIT CONTROLLERS

13.1 Connection to the DAWN workstation (v 4.3c or later)

1. Feed house sync to the V1 and the DAWN,
2. Connect the time code out of the DAWN to the time code in of the V1,
3. Connect the RS422 port 1 of the V1 to one of the serial ports on the Macintosh,
4. Make sure the V1 is in Chase Off mode,
5. Make sure the V1 Sync source is “Auto”,
6. Run the DAWN software,
7. You should see a V1 track at the bottom of the mix view,
8. Make sure House Sync is checked,
9. Toggle Master/Slave and then make sure you end up in master mode,
10. Hit play, both units should play in sync,
11. Hit Stop, both unit should stop.

The DAWN should always be in master mode.

13.2 Connection to the Akai DD-1500 with RS422 control (recommended)

1. Use the standard RS422 direct cable male-male 9 pins (Master to Slave).,
2. Feed House Sync to the V1 and to the DD1500,
3. Connect the serial cable between the V1 RS422 port 1 and the DD1500,
4. Set the DD1500 Word Sync to Video A (29.97 for NTSC, 25fps for PAL),
5. Set the Ext M/C of the DD1500 to Master,
6. Make sure the V1 is in Chase Off mode.

Please contact Akai to get the best connection with the DD-1500 and the DD-8.

13.3 Connection to the Akai DD-1500 in CHASE RS422 Mode

1. If you did not receive a special serial cable that is DB9 Male to Male specific to the DD1500, you need to make one with the following pin-out (This is a twisted Slave to Slave cable) :
   pin 1 -> pin 1
   pin 2 -> pin 8
   pin 3 -> pin 7
   pin 4 -> pin 6
   pin 5 -> pin 5
   pin 6 -> pin 4
   pin 7 -> pin 3
   pin 8 -> pin 2
   pin 9 -> pin 9
2. Feed house sync to the V1 and to the DD1500
3. Connect the serial cable between the V1 RS422 port 1 and the DD1500
4. Set the DD1500 Word Sync to Video A (29.97 for NTSC, 25 fps for PAL),
5. Set the Ext M/C of the DD1500 to Full Slave,
6. Set the Chase mode of the V1 to RS422.

Use the DD1500 as if it is standalone, the V1 will chase to it at any speed.

13.4 Connection to the Fairlight

1. Feed House Sync to the V1 and the Fairlight,
2. Connect the serial cable between the Fairlight and the V1 RS422 port 1,
3. On the V1, set the Jog Speed to No Limit and save using Option Menu 4.
4. Run the Fairlight software, Hit the Machine 1 button to put the V1 on-line
5. Push buttons for setup of M1
6. Set Lace parameters to UNLACE=ON
7. And the LACE time parameter to 0 SEC

The Fairlight software will control the V1 properly.

13.5 Connection to the Microlynx, the Lynx 1 and Lynx 2 synchronizers

1. Feed house sync to the V1 and the lynx,
2. If you are using a Lynx 1, connect the time code out of the V1 to the time code in of the Lynx
3. Connect the transport serial cable between the Lynx and the V1
4. In the Transport menu, select the machine as DVR10.
5. Set the Preroll to zero
6. If you are using a Microlynx or a Lynx 2, select Serial TC.

The Lynx will control the V1 and lock it to the system

13.6 Connection to the Sonic Solutions

1. Feed house sync to the V1 and the Sonic Station,
2. Connect the time code out of the V1 to the time code in of the Sonic,
3. Connect the serial cable between the V1 RS422 port 1 and the Sonic,
4. Select D-2 as the type of machine in the Sonic Machine list

The Sonic software will control the V1.

13.7 Connection to the Pro-Tools 4.0

Establishing Machine-control from Protools on the Macintosh

1. Connect the 9 pin RS422 cable between the V1's lower RS422 port and the Macintosh's Modem-port, Printer-port or G-Port serial port. You can also connect it to the serial port on your D24 or MIX card, but note that the VTPRO software will NOT operate through this port.
2. Connect the V1 LTC output to your LTC-to-MTC converter (for example: MOTU's MTP2 / MTP-AV, Opcode Midi interfaces, Digidesign USD etc.)
3. Connect the LTC-to-MTC converter to your Macintosh. In doing so, check that your Macintosh receives MTC data from your interface.
4. Install Digidesign's PostView or Machine Control Option on your Macintosh.
5. Power-up the V1. Make sure it operates correctly.
6. After your V1 has booted, run the Protools software.
7. Select the *Machine-Control* menu *(Protools -> Setups -> Peripherals -> Machine Control*).
8. Enable "*9-pin serial*". If it's grayed-out, try re-installing your Machine-Control software.
9. Under "*Port*", select the serial port that you connected your V1 to (see step 1).
10. Under "*Machine Type*", select "*Sony-9 pin*"
11. Under "*Node*", select "*V1*".
12. Under "*Pre-Roll*", set Pre-Roll to *30 frames*
13. Select the *Synchronization menu (Protools -> Setups -> Peripherals -> Synchronization*)
14. Under "*Device*", select the correct LTC-to-MTC converter. If you're not using a Digidesign device to perform this function, select "*Generic MTC reader*".
15. Under "*Port*", select the serial or USD port that you connected your LTC-to-MTC converter to.
16. Set "*Minimum sync delay*" to *30 frames*.

17. Select *Protools -> Setups -> Preferences -> Operation*. Activate "*Machine Follows Selection/Scrub*"
18. Locate the Transport Control on your screen. If you don't see it, select *Protools -> Display -> Show Transport*
19. Make sure "*transport = protools*" is set and that the "*online*" button (the one that looks like a clock) is selected.
20. Select *Protools -> OMS Midi*. Please be sure to deselect the serial port used by Protools for V1 control to avoid a conflict with OMS operation.

Protools will now be able to control the V1. The way it works is as followed:

- You hit play in Protools
- Then Protools will cue the V1 to the current play location MINUS the amount of frames set in step 12
- Next, the V1 will send LTC to your LTC-to-MTC converter
- Finally, Protools will receive the MTC and start chasing this timecode

If problems persist, please consult the "Protools and V1 control" FAQ's

13.8 Connection to the Orban AUDICY VX

1. Feed house sync to the V1 and to the reference video inputs on Audicy's timecode and digital input modules.
2. Connect the time code out of the V1 to Audicy's time code input, You don't need to connect Audicy's time code output.
3. Connect the RS422 port 1 of the V1 to the Audicy's RS-422 output, through the Orban adapter cable supplied.
4. Make sure the V1 is in Chase Off mode.
5. Make sure Audicy's I/O Setup has Sync Source set to Video and your local sync rate (NTSC or PAL). You may set this as a default.
6. Make sure Audicy's VTR Setup is set for +2 frame Timecode Delay, and normal Chase Dynamics and Lock Criterion. You may set this as a default.

If you press Audicy's Machine Control button, the V1 will follow every move you make on the Audicy. If you press Audicy's Chase button, it will follow every move you make on the V1. You may switch freely between these functions during a session.

13.9 Connection to the Dyaxis II

This connection scheme is used to connect the V1 to StudioFrame, Audiofile, Audiovision, Post-Pro, Dyaxis II, Protools 4.0 etc.

1. Feed house sync to the V1 and the DAW,
2. Connect the time code out of the V1 to the time code in of the DAW,
3. Connect the serial cable between the V1 RS422 port 1 and the DAW,
4. From the Dyaxis II software choose the following two options:
   - Internal Time Code on 9 Pin
   - Time Code on Audio Tracks

13.10 Most Common Connection

This connection scheme is used to connect the V1 to StudioFrame, Audiofile, Audiovision, Post-Pro, Dyaxis II, Protools 4.0 etc.
1. Feed house sync to the V1 and the DAW,
2. Connect the time code out of the V1 to the time code in of the DAW,
3. Connect the serial cable between the V1 RS422 port 1 and the DAW,

Run the DAW software which will control the V1.

13.11 List of DAWs & Editors currently supported by the V1(*)

Adams-Smith SuperController, Akai DD1500, AMS Neve Audiofile, Augan OMX, DAR, Digidesign Protools 4.0, Digigram X-Track, Doremi Labs Dawn II v. 4.3+, Fairlight MFX3, Fast Video Machine, Sadie, Sonic Solutions, Sony BVE, Spectral, Studer Dyaxis, SSL/Screensound, Synclavier, TimeLine Vista Waveframe/StudioFrame, TimeLine Lynx & Micro Lynx Synchronizers .

Special note for the SSL/Screensound :
On the Screensound, go into the page 'Setup Serial' and select 'Motion Off'. The V1 will be controlled by the Screensound. The offset on the Screensound must then be set to 0; if not the Screensound will operate as if a real offset is present between the V1 and the audio tracks on the Screensound.

The V1 can be used with virtually all systems that have the ability to control video machines through serial Sony 9 Pin protocol like SSL Consoles, Euphonix consoles, Slow-Motion Controllers, Desktop Remote Controllers....
See note 12.4 about the V1 RS422 protocol identification.

(*) This list is not absolute, contact Doremi Labs if your product is not listed above

13.12 Using the V1 with Edit Controllers

These notes are written specifically for the RM450 Edit Controller, but most of the settings and recommendations should be the same regardless of the Edit Controller used.

Player: CTL and 9pin
Preroll: 5
Synchro: ON (according to their documentation the ON/CF mode uses color frame information to synchronize but the precision of the edit is lower. The best precision is when Synchro is ON)
Recorder: CTL and 9pin

When you use a V1 on the player or on the recorder the setting of the RM450 should be in CTL mode and the V1 should be either in A-Time or A-Time As LTC. The V1 will not work properly if the switch is set to TC.

The DIP switches:
Left side: All OFF
Right Side: All OFF except bit number 2 which sets the edit time to 4. Do not use the default setting, which is Auto mode.

On the V1 side, the recorder should be set to: Edit IN=4 and Edit OUT=4 and the unit should be in Frame Mode=ON
This will allow the Edit to happen only on frames and the IN and OUT points will be accurate.

Other settings on the V1:
Emulation =BVW-75
Mode =Remote
Time Mode =A-Time or A-Time in LTC
Sync Source: Sync IN

Other important connections: The RM450, the Player and the Recorder (V1) should be locked to the same House Sync signal.

Our Recommendations:

1. RM450 on the V1side should be in CTL mode and the V1 should be in A-Time or A-Time As LTC.
2. Synchro = ON
3. RM450, Left side DIP Switches: All OFF
4. RM450, Right Side DIP Switches: All OFF except bit number 2 which sets the edit time to 4 frames.
5. V1, Emulation: BVW75
6. V1, Frame Mode = ON
7. V1, Edit IN = 5
8. V1, Edit OUT = 5
9. Lock all units including the RM450 to House Sync and set the V1 to Sync Source = Sync IN
10. V1, Mode = Remote

14 INSTALLING SCSI DRIVES

14.1 V1 and removable SCSI drives

- The V1 is factory set to SCSI ID 7.
- The internal SCSI cable on the V1 is 68-pin. To be able to mount 50-pin devices you need to order the SCSI68-50 adapter
- If you have a SCSI connector on the back of your unit, you must place the provided terminator it. If you connect an external SCSI box to it, the external box must be properly terminated.
- If you don't have a SCSI connector on the back it means that the unit was shipped to you with an internal terminator. If you want to have the external connector, please contact tech support.
- To avoid conflicts, **Don't use this ID 7 for any drive to be installed.**

Since drives recorded on DCT units cannot be played on MPEG2 or Uncompressed units, we made a distinction as to which Data Express mechanism should be used with each of our products

The V1 uses Ultra Wide LVD SCSI at 80 MB/s. The SCSI connector on the back of the unit should always be terminated.

1. For DCT products, we recommend for the V1, V1d and V1m using the DE100i-SW/B. For the V1x2 use the DE300i-SWC160/B. Use only an LVD SCSI terminator.

2. For MPEG2 products, we recommend using the DE100i-SWC160/B. Since the SWC mechanism is different than the SW, this will ensure that only MPEG2 disks are used with V1 MPEG2 units, and will avoid confusion with V1 DCT disks. Use only an LVD SCSI terminator.

3. For SD uncompressed products (V1-U), the storage will be provided by Doremi or by an authorized dealer with one DE300i-SWC160/B. Use only an LVD SCSI terminator.

4. For HD uncompressed products (V1-UHD), the storage will be provided by Doremi or by an authorized dealer. Use the provided terminator (SE/LVD/160)

14.2 Important Note about using Jaz Drives

DOREMI LABS DOES NOT RECOMMEND THE USE OF THE JAZ DRIVE WITH THE V1. DOREMI LABS, INC. RESERVES THE RIGHT TO REFUSE PROVIDING SUPPORT TO CUSTOMER WITH A JAZ DRIVE INSTALLED ON THEIR UNITS.

14.3 Mounting Data-Express on all V1 DCT products except V1x2

- Disconnect all cables including power from the back of the V1
- Prepare your Kingston receiver according to one of the following diagrams:

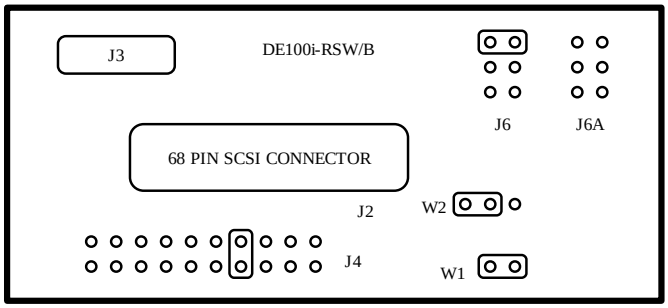

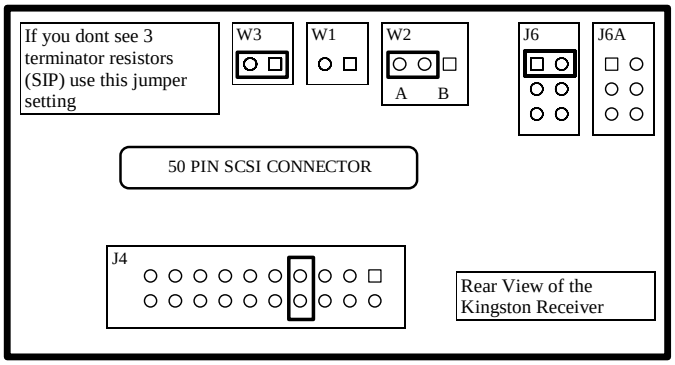

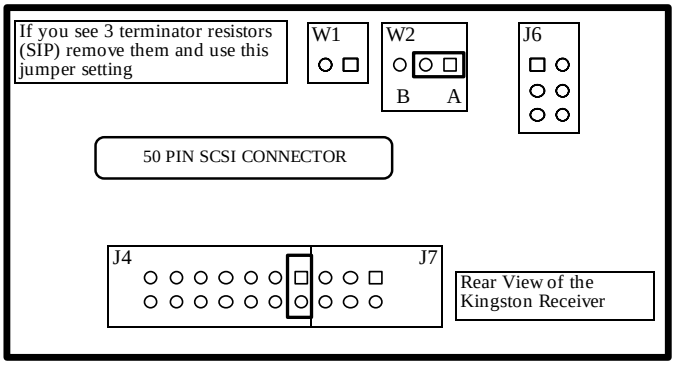

- Install the hard drive in the carrier *(See Sections,* ***Error! Reference source not found.*** *for setup)*, connect the SCSI Id cable supplied (black/brown/red/orange/yellow) to the correct jumpers on the hard drive (Check also the direction).
- Install the receiver on the bottom V1 tray.
- Connect SCSI and power to the Data-Express.
- Power ON the V1 and set the SCSI ID of the Data-Express to ID4 (screw on the right hand side of the receiver) using the screwdriver provided with the Data-Express. For more detail refer to the Data-Express manual.
- Insert the Data Express carrier holding the drive in the receiver.
- Turn the Data Express key counter-clockwise to power on the drive

- Wait for about 40 seconds the “No Disk” message on your LCD will either disappear (Disk already initialized on a V1), or a new message saying “No MD Present” will appear. In case you get “No MD Present”, select the proper compression ratio and initialize the drive. There is no need to perform a Format command on new drives.

14.4 Mounting Data-Express on the V1x2 without drive sharing

The only available Data Express model for this unit is the DE300i-SWC160/B. Since the V1x2 has 2 internal SCSI cables, one should be connected to the top slot of the DE300i-SWC160/B, the other SCSI cable should be connected to the bottom slot.

14.5 Mounting Data-Express on the V1x2 sharing a drive

The only available Data Express model for this unit is the DE300i-SWC160/B. To share a disk, there should be only one internal SCSI cable going from Channel-1 to all 3 connectors of the DE300i-SWC160/B then to Channel-2.

14.6 Mounting Data-Express on the V1-U

The only available Data Express model for this unit is the DE300i-SWC160/B. Since the V1-U has 1 internal SCSI cable, it should go from the V1-U main-board to all 3 slots then to a LVD terminator.

14.7 Mounting Data-Express on the V1-MP2

The recommended Data Express model for this unit is the DE100i-RSWC160/B.

The following diagram shows how you should setup the receiver

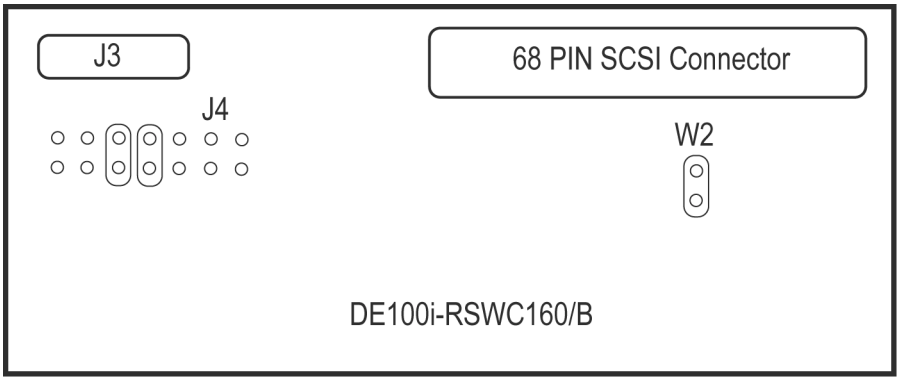

15 Addendum